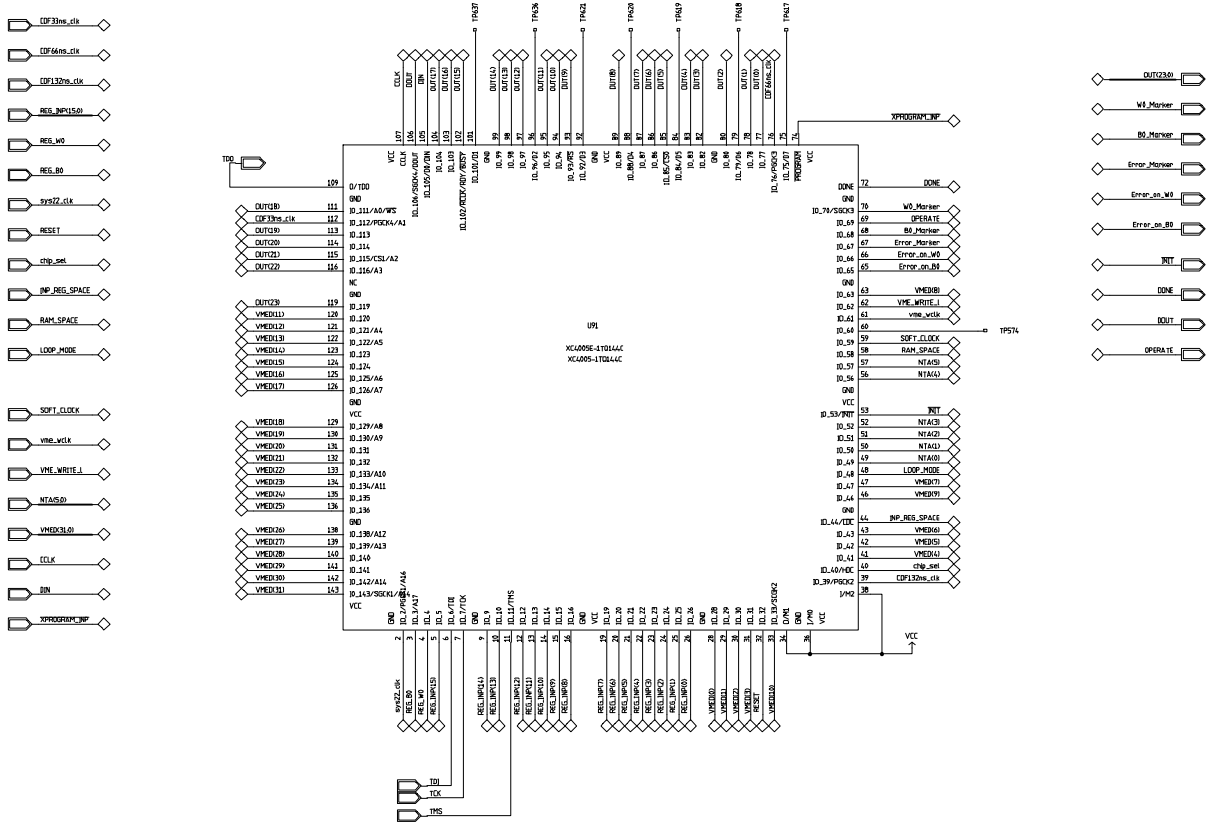

DWG NO	SIN	REV

REVISIONS

REV	DESCRIPTION	DATE	APPROVED

CDF UPGRADE ELECTRONICS

Fermi National Accelerator Lab

XFT Finder_13_V4 SL1 +N'
Super Layers 1 3
Alignment Logic - Finder Input

Theresa M. Shav

PPD/ET&T/CDF_Upgrade

SIZE	FSCM NO	DWG NO	REV
D		TMS-XFTFND13-021999-P7F	A

SCALE | SHEET 1 of 1