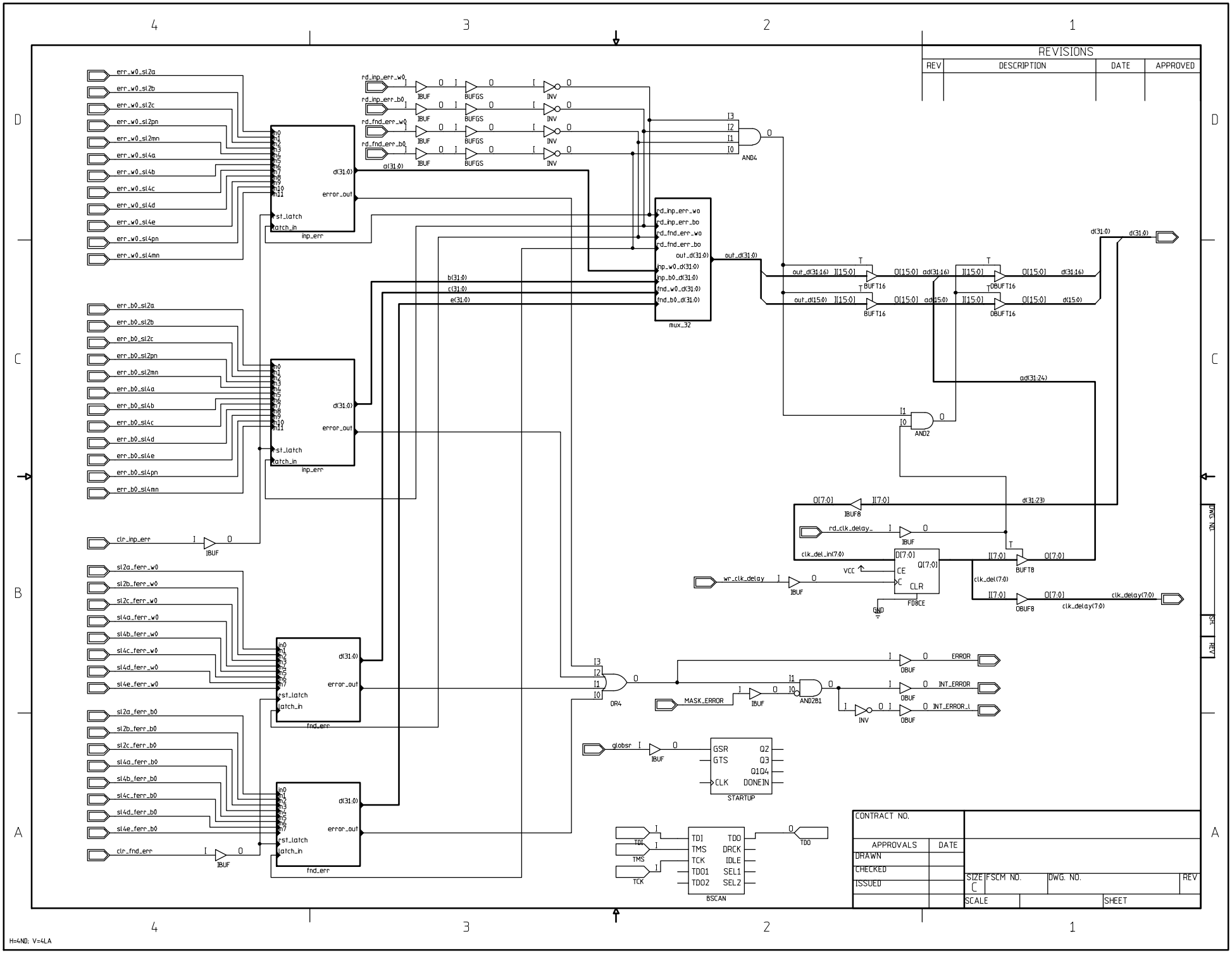
REVISIONS
REV
DESCRIPTION
DATE
APPROVED
err_w0_sl2a
err_w0_sl2b
err_w0_sl2c
err_w0_sl2pn
err_w0_sl2mn
err_w0_sl4a
err_w0_sl4b
err_w0_sl4c
err_w0_sl4d
err_w0_sl4e
err_w0_sl4pn
err_w0_sl4mn
d(31:0)
error_out
rst_latch
latch_in
inp_err
rd_inp_err_w0
rd_inp_err_b0
rd_fnd_err_w0
rd_fnd_err_b0
a(31:0)
IBUF
BUFGS
INV
AND4
mux_32
out_d(31:0)
inp_w0_d(31:0)
inp_b0_d(31:0)
fnd_w0_d(31:0)
fnd_b0_d(31:0)
b(31:0)
c(31:0)
e(31:0)
err_b0_sl2a
err_b0_sl2b
err_b0_sl2c
err_b0_sl2pn
err_b0_sl2mn
err_b0_sl4a
err_b0_sl4b
err_b0_sl4c
err_b0_sl4d
err_b0_sl4e
err_b0_sl4pn
err_b0_sl4mn
clr_inp_err
sl2a_ferr_w0
sl2b_ferr_w0
sl2c_ferr_w0
sl4a_ferr_w0
sl4b_ferr_w0
sl4c_ferr_w0
sl4d_ferr_w0
sl4e_ferr_w0
fnd_err
sl2a_ferr_b0
sl2b_ferr_b0
sl2c_ferr_b0
sl4a_ferr_b0
sl4b_ferr_b0
sl4c_ferr_b0
sl4d_ferr_b0
sl4e_ferr_b0
clr_fnd_err
out_d(31:16)
out_d(15:0)
BUFT16
OBUFT16
ad(31:16)
ad(15:0)
d(31:16)
d(15:0)
ad(31:24)
AND2
d(31:23)
IBUF8
rd_clk_delay_
clk_del_in(7:0)
wr_clk_delay
VCC
GND
FD8CE
BUFT8
OBUF8
clk_del(7:0)
clk_delay(7:0)
OR4
ERROR
MASK_ERROR
AND2B1
INT_ERROR
INT_ERROR_L
globsr
GSR
GTS
CLK
Q2
Q3
Q1Q4
DONEIN
STARTUP
TDI
TMS
TCK
TDO
TDO1
TDO2
DRCK
IDLE
SEL1
SEL2
BSCAN
CONTRACT NO.
APPROVALS
DATE
DRAWN
CHECKED
ISSUED
SIZE
C
FSCM NO.
DWG. NO.
REV
SCALE
SHEET
DWG. NO.
REV
H=4ND; V=4LA