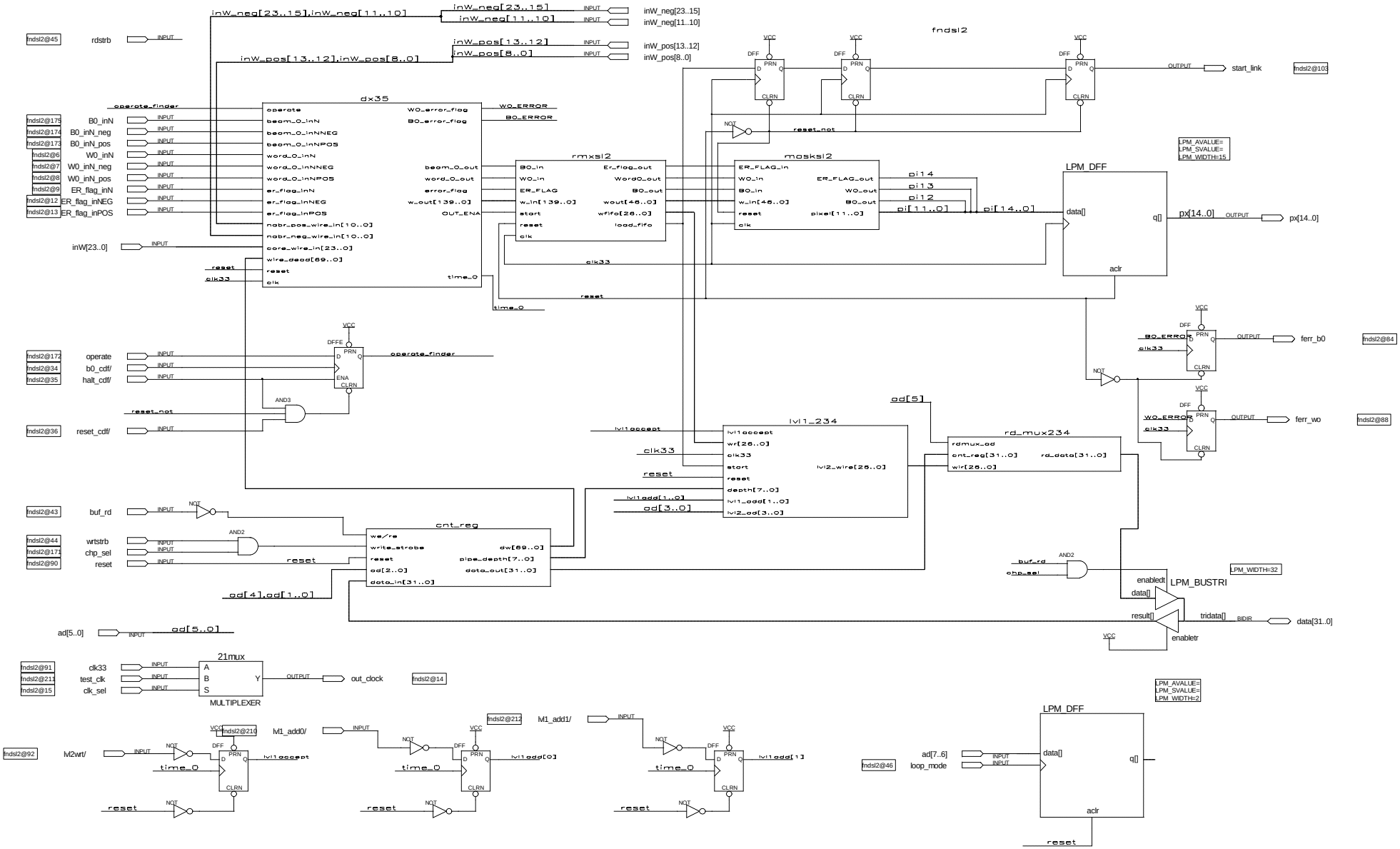
fndsl2
dx35
rmxsl2
mosksl2
LPM_DFF
lvl1_234
rd_mux234
cnt_reg
LPM_BUSTRI
21mux
MULTIPLEXER
inW_neg[23..15],inW_neg[11..10]
inW_pos[13..12],inW_pos[8..0]
inW_neg[23..15]
inW_neg[11..10]
inW_pos[13..12]
inW_pos[8..0]
rdstrb
operate_finder
B0_inN
B0_inN_neg
B0_inN_pos
W0_inN
W0_inN_neg
W0_inN_pos
ER_flag_inN
ER_flag_inNEG
ER_flag_inPOS
inW[23..0]
reset
clk33
operate
b0_cdf/
halt_cdf/
reset_cdf/
buf_rd
wrtstrb
chp_sel
ad[5..0]
clk33
test_clk
clk_sel
out_clock
start_link
px[14..0]
ferr_b0
ferr_wo
data[31..0]
lvl2wrt/
lvl_add0/
lvl_add1/
loop_mode
ad[7..6]
LPM_AVALUE=
LPM_SVALUE=
LPM_WIDTH=15
LPM_WIDTH=32
LPM_WIDTH=2