DWG NO	SH	REV

REVISIONS

REV	DESCRIPTION	DATE	APPROVED

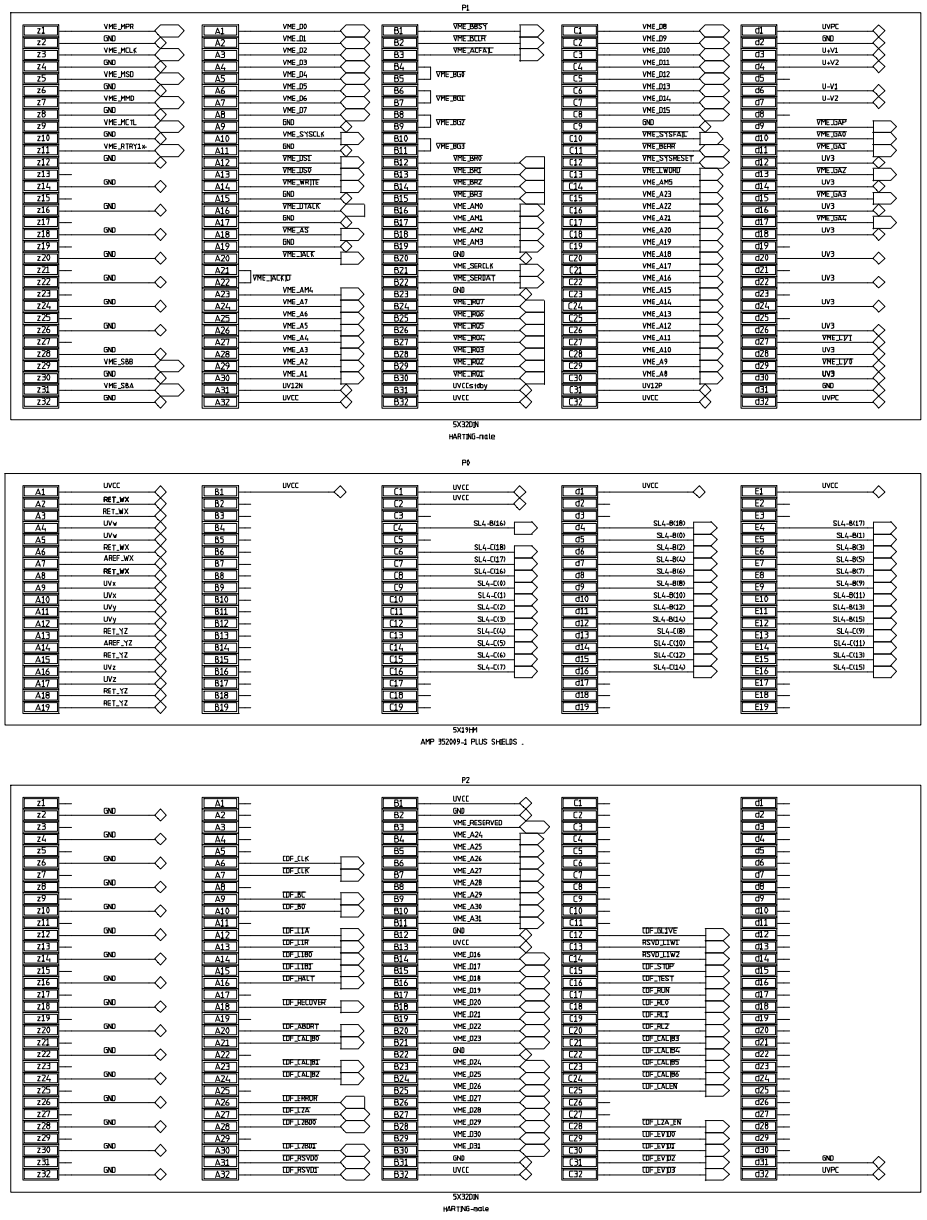

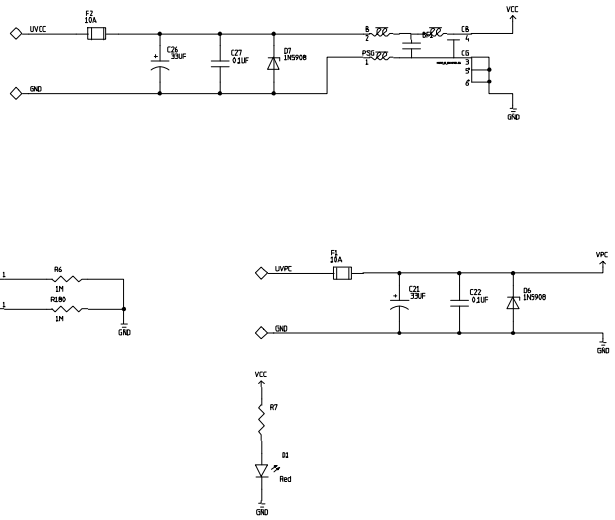

CDF UPGRADE ELECTRONICS	Fermi National Accelerator Lab		
	XFT Finder_24_V4 Super Layers 2 4 VMEbus P1, P0, P2 Connectors		
Theresa M. Shaw Scott Hakim	SIZE D	DWG NO TMS-XFTFND24-021999-P1	REV A
PPD/ET&T/CDF_Upgrade	SCALE	SHEET 1 of 18	