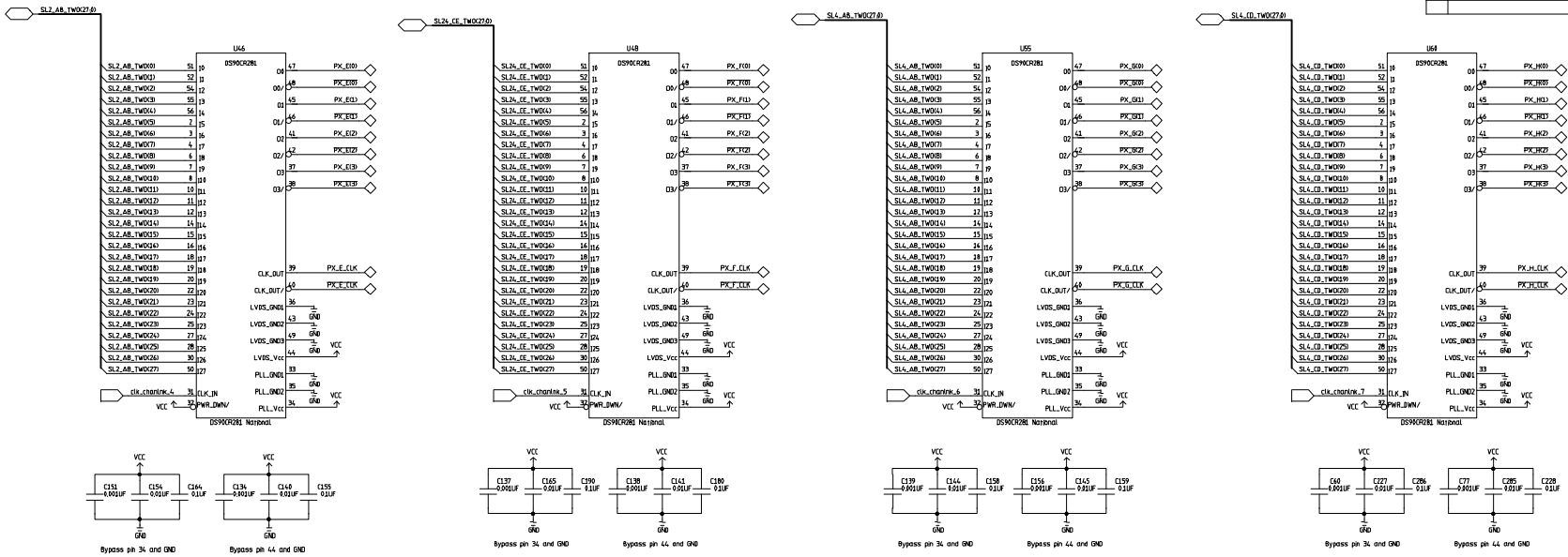

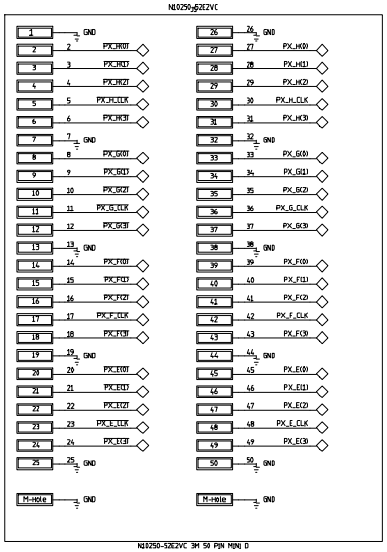

DWG NO	SH	REV

REVISIONS

REV	DESCRIPTION	DATE	APPROVED

CDF UPGRADE ELECTRONICS

Fermi National Accelerator Lab

XFT Finder_24_V4
Super Layers 2 4
Channel Link Drivers

Theresa M. Shaw
Scott Holm

PPD/ET&T/CDF_Upgrade

SIZE D | FSCM NO | DWG NO TMS-XFTFND24-021999-P12 | REV A

SCALE | SHEET 12 of 18