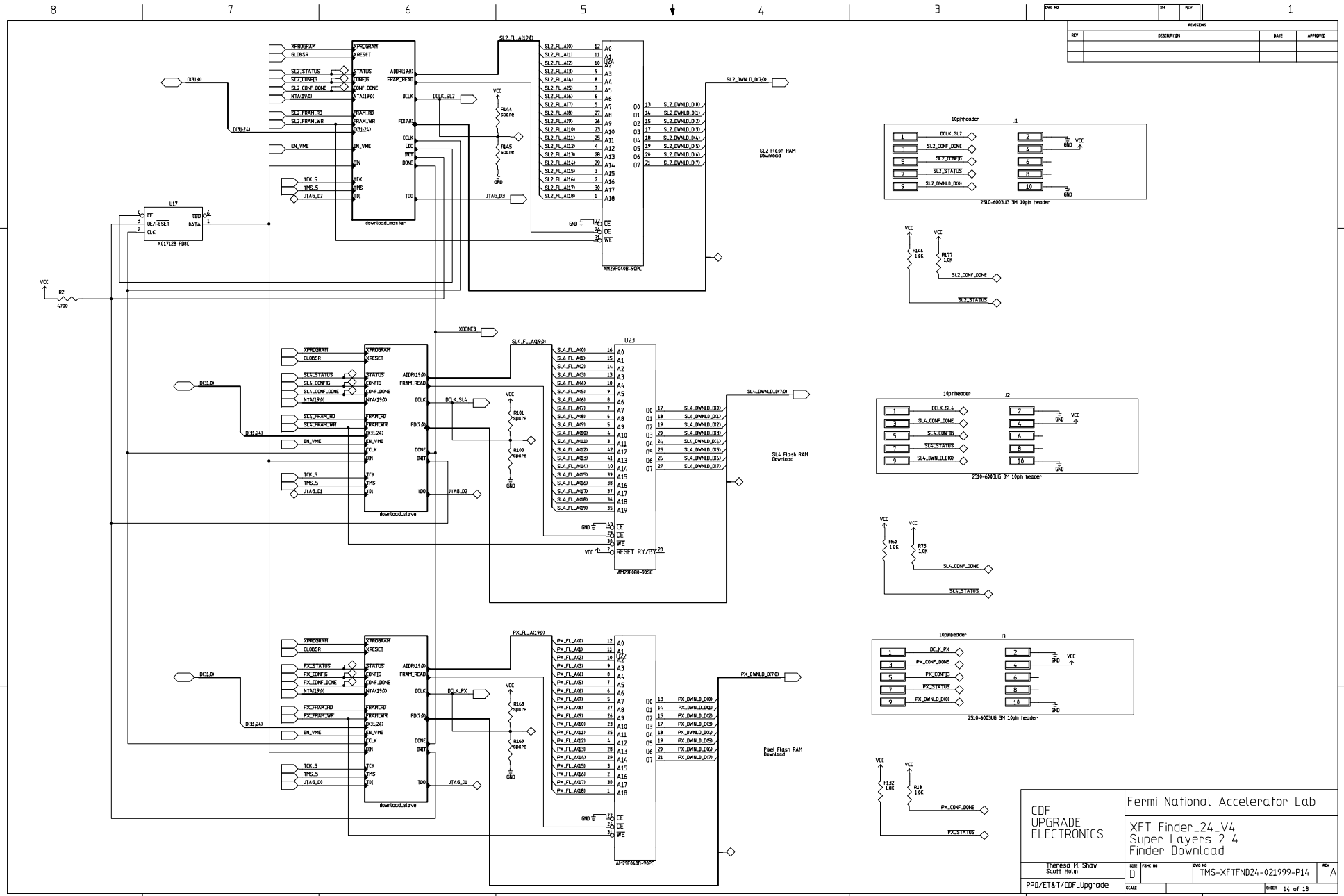
REVISIONS
REV
DESCRIPTION
DATE
APPROVED
DWG NO
SH
REV
U17
XC17128-PDIC
CE
OE/RESET
CLK
CEO
DATA
R2
470Ω
VCC
XPROGRAM
GLOBSR
SL2_STATUS
SL2_CONFIG
SL2_CONF_DONE
NTA(19:0)
SL2_FRAM_RD
SL2_FRAM_WR
D(31:24)
EN_VME
TCK_S
TMS_S
JTAG_D2
D(31:0)
XPROGRAM
XRESET
STATUS
CONFIG
CONF_DONE
NTA(19:0)
FRAM_RD
FRAM_WR
D(31:24)
EN_VME
CIN
TCK
TMS
TDI
ADDR(19:0)
FRAM_READ
DCLK
FD(7:0)
DCLK
CRC
INIT
DONE
TDO
download_master
DCLK_SL2
JTAG_D3
R144
spare
R145
spare
SL2_FL_A(19:0)
SL2_FL_A(0)
SL2_FL_A(1)
SL2_FL_A(2)
SL2_FL_A(3)
SL2_FL_A(4)
SL2_FL_A(5)
SL2_FL_A(6)
SL2_FL_A(7)
SL2_FL_A(8)
SL2_FL_A(9)
SL2_FL_A(10)
SL2_FL_A(11)
SL2_FL_A(12)
SL2_FL_A(13)
SL2_FL_A(14)
SL2_FL_A(15)
SL2_FL_A(16)
SL2_FL_A(17)
SL2_FL_A(18)
A0
A1
A2
A3
A4
A5
A6
A7
A8
A9
A10
A11
A12
A13
A14
A15
A16
A17
A18
O0
O1
O2
O3
O4
O5
O6
O7
SL2_DWNLD_D(0)
SL2_DWNLD_D(1)
SL2_DWNLD_D(2)
SL2_DWNLD_D(3)
SL2_DWNLD_D(4)
SL2_DWNLD_D(5)
SL2_DWNLD_D(6)
SL2_DWNLD_D(7)
CE
OE
WE
AM29F040B-90PC
SL2_DWNLD_D(7:0)
SL2 Flash RAM Download
10pinheader
J1
DCLK_SL2
SL2_CONF_DONE
SL2_CONFIG
SL2_STATUS
SL2_DWNLD_D(0)
2510-6003UG 3M 10pin header
R146
1.0K
R177
1.0K
SL2_CONF_DONE
SL2_STATUS
XDONE3
U23
XPROGRAM
GLOBSR
SL4_STATUS
SL4_CONFIG
SL4_CONF_DONE
NTA(19:0)
SL4_FRAM_RD
SL4_FRAM_WR
D(31:24)
EN_VME
TCK_S
TMS_S
JTAG_D1
D(31:0)
XPROGRAM
XRESET
STATUS
CONFIG
CONF_DONE
NTA(19:0)
FRAM_RD
FRAM_WR
D(31:24)
EN_VME
CIN
TCK
TMS
TDI
ADDR(19:0)
FRAM_READ
DCLK
FD(7:0)
DONE
INIT
TDO
download_slave
DCLK_SL4
JTAG_D2
R101
spare
R100
spare
SL4_FL_A(19:0)
SL4_FL_A(0)
SL4_FL_A(1)
SL4_FL_A(2)
SL4_FL_A(3)
SL4_FL_A(4)
SL4_FL_A(5)
SL4_FL_A(6)
SL4_FL_A(7)
SL4_FL_A(8)
SL4_FL_A(9)
SL4_FL_A(10)
SL4_FL_A(11)
SL4_FL_A(12)
SL4_FL_A(13)
SL4_FL_A(14)
SL4_FL_A(15)
SL4_FL_A(16)
SL4_FL_A(17)
SL4_FL_A(18)
SL4_FL_A(19)
A0
A1
A2
A3
A4
A5
A6
A7
A8
A9
A10
A11
A12
A13
A14
A15
A16
A17
A18
A19
O0
O1
O2
O3
O4
O5
O6
O7
SL4_DWNLD_D(0)
SL4_DWNLD_D(1)
SL4_DWNLD_D(2)
SL4_DWNLD_D(3)
SL4_DWNLD_D(4)
SL4_DWNLD_D(5)
SL4_DWNLD_D(6)
SL4_DWNLD_D(7)
CE
OE
WE
RESET RY/BY
AM29F080-90SC
SL4_DWNLD_D(7:0)
SL4 Flash RAM Download
10pinheader
J2
DCLK_SL4
SL4_CONF_DONE
SL4_CONFIG
SL4_STATUS
SL4_DWNLD_D(0)
2510-6003UG 3M 10pin header
R60
1.0K
R75
1.0K
SL4_CONF_DONE
SL4_STATUS
D(31:0)
XPROGRAM
GLOBSR
PX_STATUS
PX_CONFIG
PX_CONF_DONE
NTA(19:0)
PX_FRAM_RD
PX_FRAM_WR
D(31:24)
EN_VME
TCK_S
TMS_S
JTAG_D0
XPROGRAM
XRESET
STATUS
CONFIG
CONF_DONE
NTA(19:0)
FRAM_RD
FRAM_WR
D(31:24)
EN_VME
CIN
TCK
TMS
TDI
ADDR(19:0)
FRAM_READ
DCLK
FD(7:0)
DONE
INIT
TDO
download_slave
DCLK_PX
JTAG_D1
R168
spare
R169
spare
PX_FL_A(19:0)
PX_FL_A(0)
PX_FL_A(1)
PX_FL_A(2)
PX_FL_A(3)
PX_FL_A(4)
PX_FL_A(5)
PX_FL_A(6)
PX_FL_A(7)
PX_FL_A(8)
PX_FL_A(9)
PX_FL_A(10)
PX_FL_A(11)
PX_FL_A(12)
PX_FL_A(13)
PX_FL_A(14)
PX_FL_A(15)
PX_FL_A(16)
PX_FL_A(17)
PX_FL_A(18)
A0
A1
A2
A3
A4
A5
A6
A7
A8
A9
A10
A11
A12
A13
A14
A15
A16
A17
A18
O0
O1
O2
O3
O4
O5
O6
O7
PX_DWNLD_D(0)
PX_DWNLD_D(1)
PX_DWNLD_D(2)
PX_DWNLD_D(3)
PX_DWNLD_D(4)
PX_DWNLD_D(5)
PX_DWNLD_D(6)
PX_DWNLD_D(7)
CE
OE
WE
AM29F040B-90PC
PX_DWNLD_D(7:0)
Pixel Flash RAM Download
10pinheader
J3
DCLK_PX
PX_CONF_DONE
PX_CONFIG
PX_STATUS
PX_DWNLD_D(0)
2510-6003UG 3M 10pin header
R132
1.0K
R18
1.0K
PX_CONF_DONE
PX_STATUS
CDF
UPGRADE
ELECTRONICS
Fermi National Accelerator Lab
XFT Finder_24_V4
Super Layers 2 4
Finder Download
Theresa M. Shaw
Scott Holm
PPD/ET&T/CDF_Upgrade
SIZE
D
FSCM NO
DWG NO
TMS-XFTFND24-021999-P14
REV
A
SCALE
SHEET 14 of 18