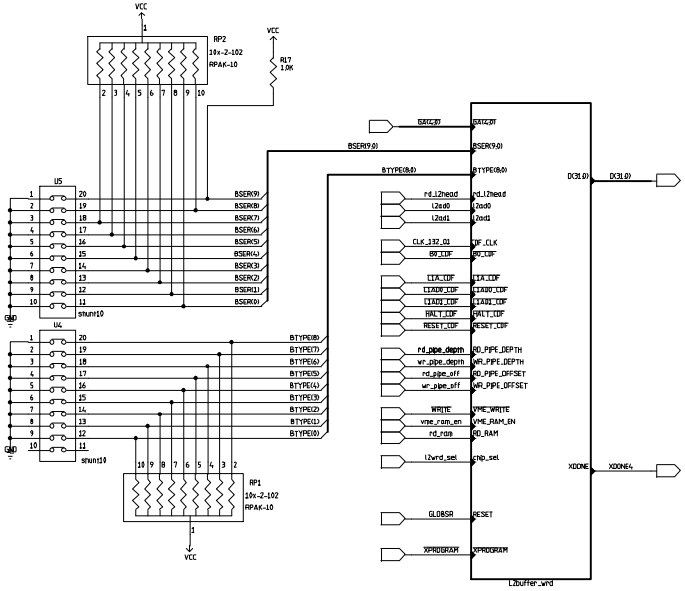

DWG NO	SR	REV

REVISIONS

REV	DESCRIPTION	DATE	APPROVED

CDF
UPGRADE
ELECTRONICS

Fermi National Accelerator Lab

XFT Finder_24_V4
Super Layers 2 4
L2 Header Word

Theresa M. Shaw
Scott Holm

PPD/ET&T/CDF_Upgrade

SIZE	FSCM NO	DWG NO	REV
D		TMS-XFTFND24-021999-P15	A

SCALE

SHEET 15 of 18