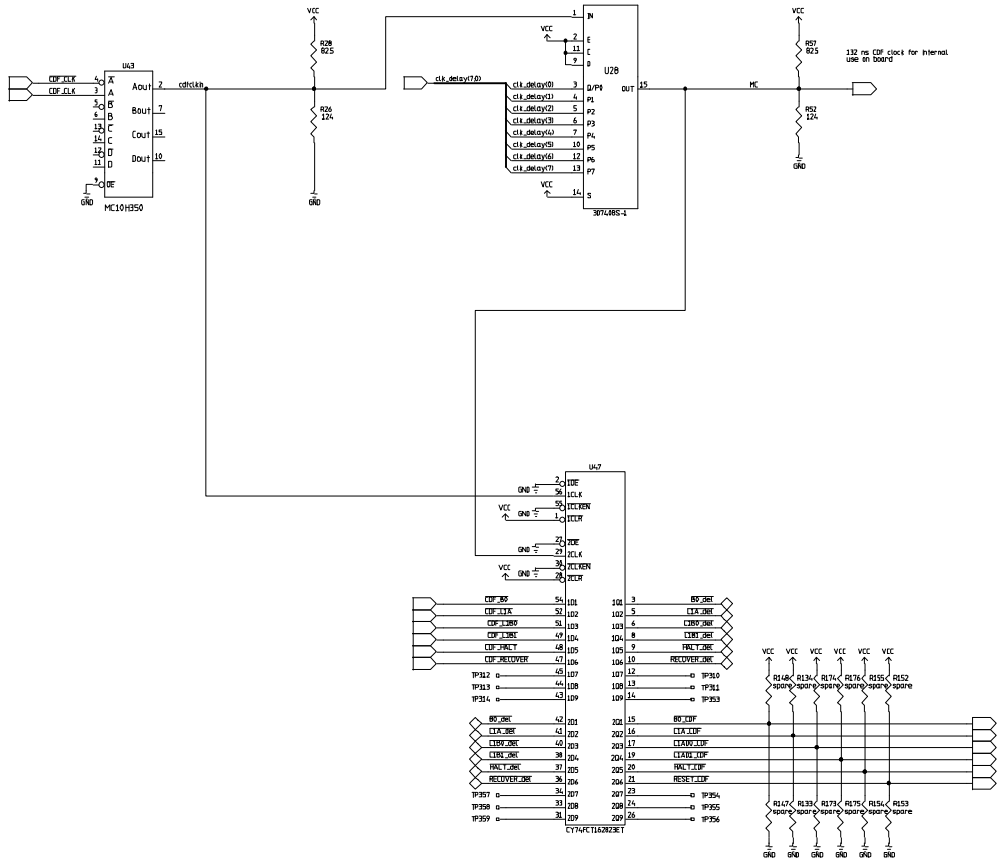

DWG NO	SH	REV

REVISIONS

REV	DESCRIPTION	DATE	APPROVED

CDF UPGRADE ELECTRONICS

Fermi National Accelerator Lab

XFT Finder_24_V4
Super Layer 2 4
Clock and Trigger phasing

Theresa M. Shaw
Scott Hoxin

PPD/ET&T/CDF_Upgrade

SIZE	FSCM NO	DWG NO	REV
D		TMS-XFTFND24-021999-P16	A

SCALE | SHEET 16 of 18