DWG NO	SH	REV

REVISIONS

REV	DESCRIPTION	DATE	APPROVED

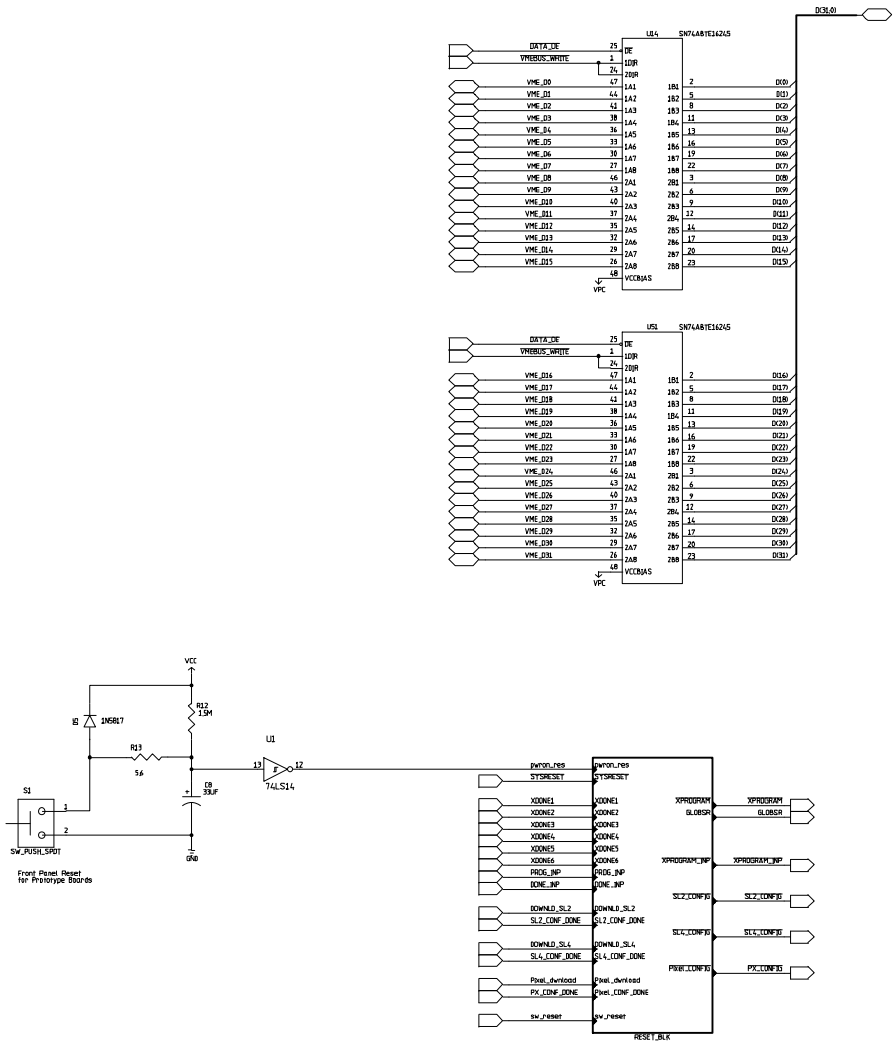

CDF UPGRADE ELECTRONICS	Fermi National Accelerator Lab		
	XFT Finder_24_V4 Super Layers 2 4 VMEbus Data Transceivers		
Theresa M. Shaw Scott Holm	SIZE D	FSCM NO	DWG NO TMS-XFTFND24-021999-P4	REV A
PPD/ET&T/CDF_Upgrade	SCALE		SHEET 4 of 18