No. OF CONTACT	PART No.	A	B	C	D	STANDARD KEY POSITION
20	RPS-D20RF()G1-()	18.57	15.67	1.27x9=11.43	0.635x19=12.065	A, B, AB
26	RPS-D26RF()G1-()	22.38	19.48	1.27x12=15.24	0.635x25=15.875	A, B, AB
34	RPS-D34RF()G1-()	27.46	24.56	1.27x16=20.32	0.635x33=20.955	1C, 2A, AC
40	RPS-D40RF()G1-()	31.27	28.37	1.27x19=24.13	0.635x39=24.765	1C, 2A, AC
50	RPS-D50RF()G1-()	37.62	34.72	1.27x24=30.48	0.635x49=31.115	1D, 2A, AD
52	RPS-D52RF()G1-()	38.89	35.99	1.27x25=31.75	0.635x51=32.385	1D, 2A, AD
60	RPS-D60RF()G1-()	43.97	41.07	1.27x29=36.83	0.635x59=37.465	1D, 4A, AD
68	RPS-D68RF()G1-()	49.05	46.15	1.27x33=41.91	0.635x67=42.545	1E, 4A, AE
80	RPS-D80RF()G1-()	56.67	53.77	1.27x39=49.53	0.635x79=50.165	1F, 4A, AF
100	RPS-D100RF()G1-()	69.37	66.47	1.27x49=62.23	0.635x99=62.865	1F, 6A, AF

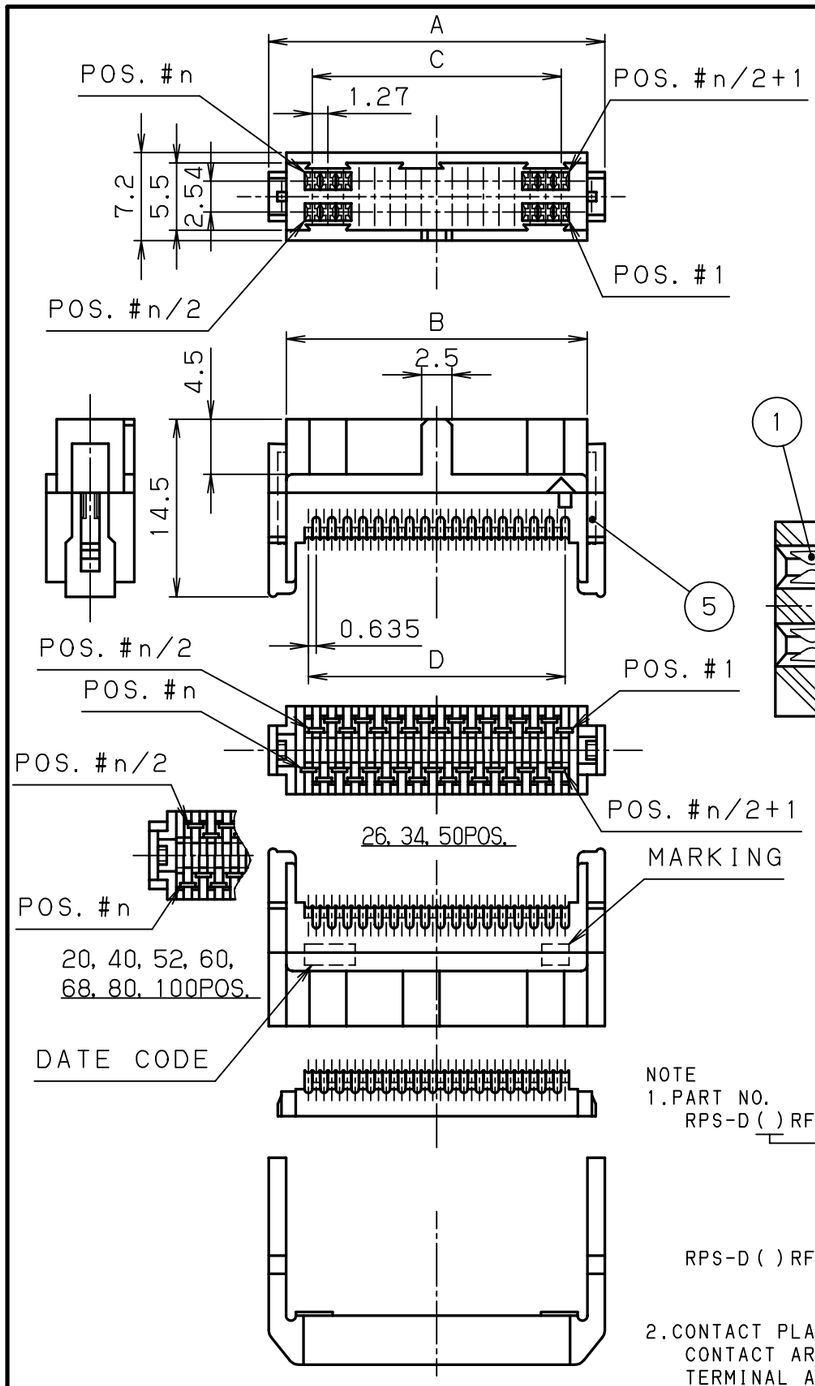

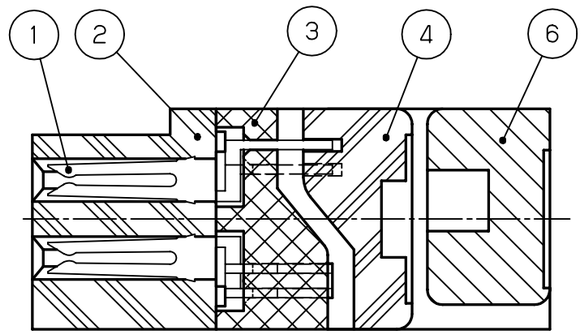

CONTACT SHAPE

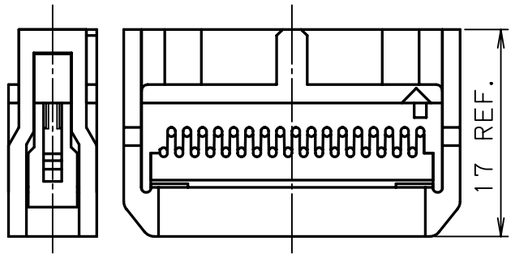

AFTER ASSEMBLY

KEY POS. DIM.

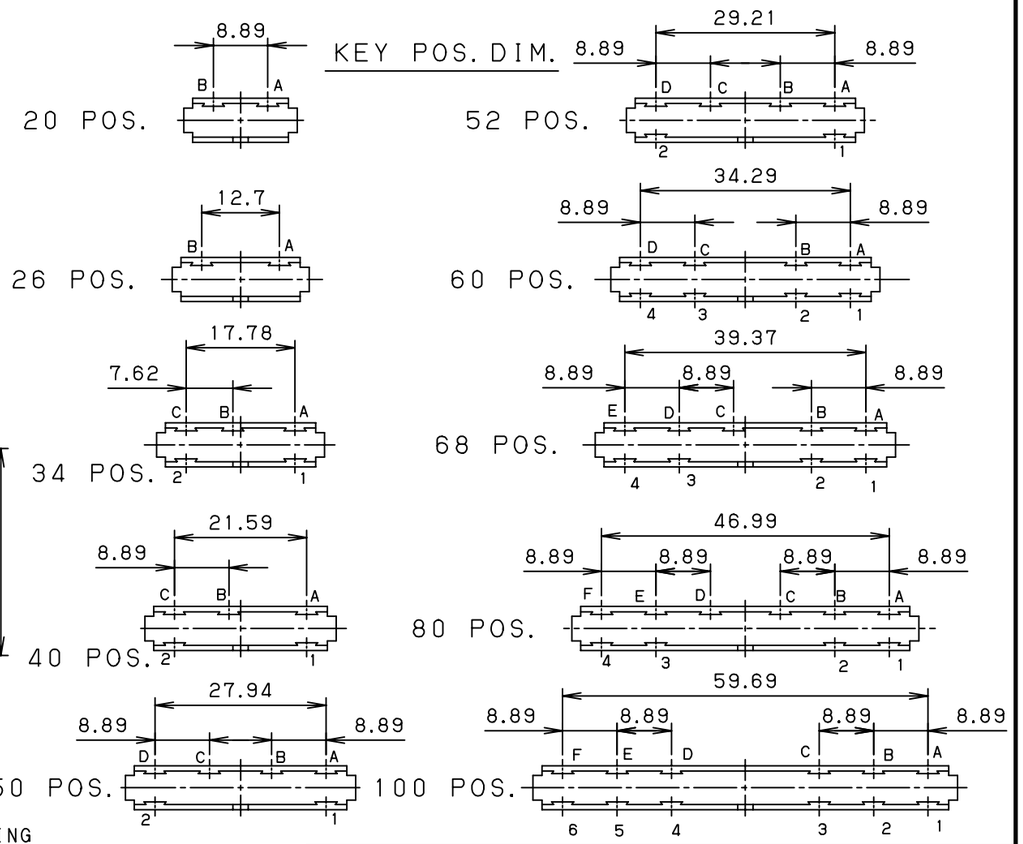

NOTE

1.PART NO.

RPS-D( )RF( )G1-( )

- NO. OF POS.
- CABLE CHARACTERISTICS
- KEY POSITION TO BE PLUGGED USING INSULATOR KEY (RPS-PK)

RPS-D( )RF( )G1 : WITHOUT ANY KEYING FEATURES.

2.CONTACT PLATING

CONTACT AREA:GOLD 0.76μm

TERMINAL AREA:TIN 0.05μm

UNDER PLATING:NICKEL 2~3.8μm

CABLE CHARACTERISTICS

PART NO.	CABLE CHARACTERISTICS	MARKING
RPS-D( )RFG1-( )	.025" SPACING FLAT CABLE #32AWG(7/0.08) THICKNESS:0.6mm(PVC)	———
RPS-D( )RFAG1-( )	.025" SPACING FLAT CABLE #30AWG(1/0.254) THICKNESS:0.6mm(PVC)	A
RPS-D( )RFBG1-( )	.025" SPACING FLAT CABLE #30AWG(7/0.102) THICKNESS:0.6mm(PVC)	B

INSULATOR KEY

(RPS-PK)

改版 LTR.	年月日 DATE	変更者 BY	変更内容 REV. DESCRIPT	番号 No.	部品名称 PART NAME	材質 MATERIAL	個数 QTY	処理 FINISH	備考 NOTE
3				6	STRAIN RELIEF	PBT RESIN(GF)	1	———	UL94V-0 BLACK COLOR
				5	LOCK PIN	BRONZE	2	NICKEL PLATING	
				4	CABLE COVER	PBT RESIN(GF)	1	———	UL94V-0 BLACK COLOR
2				3	SPACER	PBT RESIN(GF)	1	———	UL94V-0 BLACK COLOR
1				2	INSULATOR	PBT RESIN(GF)	1	———	UL94V-0 BLACK COLOR
				1	CONTACT	PHOSPHOR BRONZE	n	SEE NOTE #2	

年月日 DATE	尺度 SCALE	単位 UNIT	3角法
JUN.7 (1991)	2/1	mm(INCH)	3RD. A. P

製図 DR.	設計 DE.	検図 CHK.	検図 CHK.	承認 APP.
Y. OHKI	Y. OHKI	K. YOTSUTANI	—	K. SATO

本多通信工業株式会社

HONDA TSUSHIN KOGYO CO., LTD.

名称 NAME: RPS-D TYPE FEMALE CONNECTOR FOR .025" SPACING FLAT CABLE

製番 PART NO.: RPS-D( )RF( )G1-( ) REV A

ID= RPS-D@RF@G1-@ EA