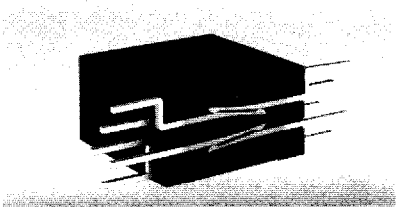

KEL

IDC for 50mil (1.27mm) Falt Cable with
One-touch Locking Ejector System

- High density 50 mil pitch connector
- Highly reliable straight beam contact
- Low insertion and withdrawal force
- IDC for 50 mil(1.27mm) flat cable(AWG28)
- Easy to operate One-Touch locking ejector system
- 13 sizes from 20 to 100 positions

50mil(1.27mm)PITCH 2PIECE CONNECTOR

8822E SERIES

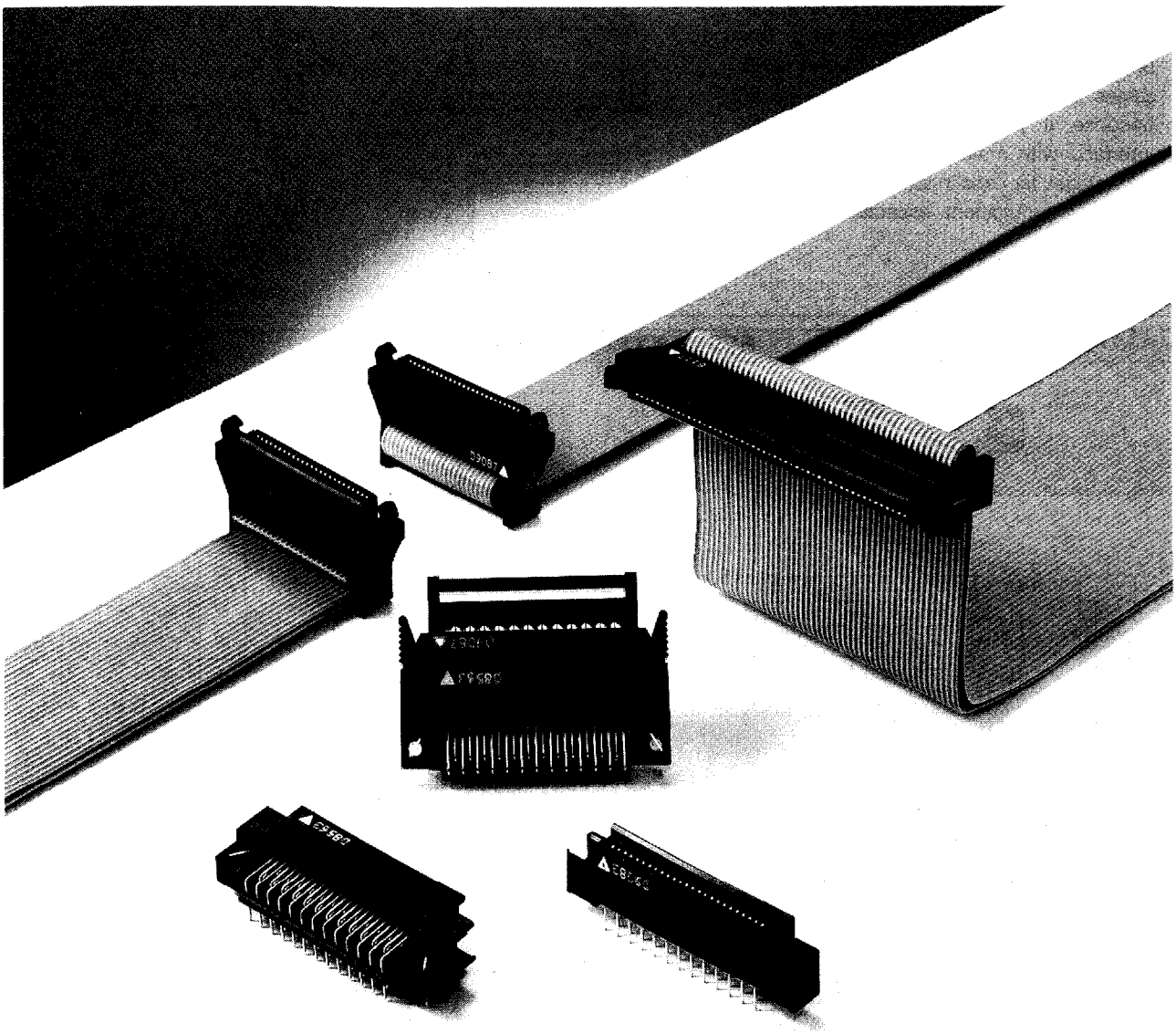

KEL CORPORATION

6-17-7 Nagayama, Tama-shi, Tokyo 206-0025, Japan
PHONE: +81-42-374-5802 FAX: +81-42-374-5888

KEL CONNECTORS, INC.

1250 Oakmead Parkway, Suite 105, Sunnyvale, CA 94086-4027, USA
PHONE: +1-408-720-9044 FAX: +1-408-720-1989 E-mail: kel@us.ntt.net

Product Outline

■The 8822E Series locking ejector system is a reversal of the MIL-STD design (KEL 6200 Series) and the locking ejectors are integral to the cable connector. The ejectors are automatically locked by insertion in the mating header like the MIL-STD design.

The latches remain within the connector outline to reduce the requirements for board space, are unlocked by applying inward pressure and can be operated by only one hand unlike the older design. Also, the 8830E series can be used with the 8800 Series for board to board interconnects because it does not have latches to interface with mating. This design offers advantages for uses in today's high density electronic equipment especially portable computers.

■Way to insert

Open the ejector of 8822E Series and insert in 8830E/8831E until mated conditions

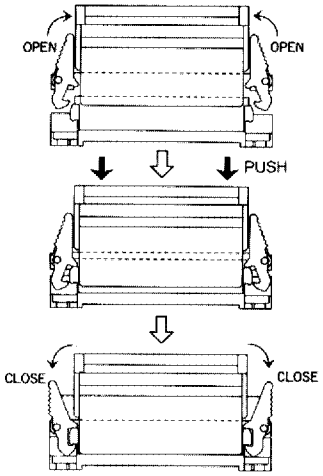

(Locked position)

■Way to withdrawal.

Press on both sides of the 8822E Series ejector to release the receptacle from the plug

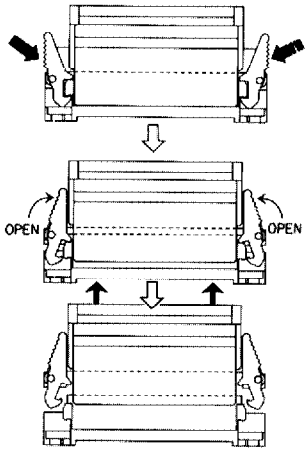

(Ejected position)

8822E-XXX-171(Receptacle)

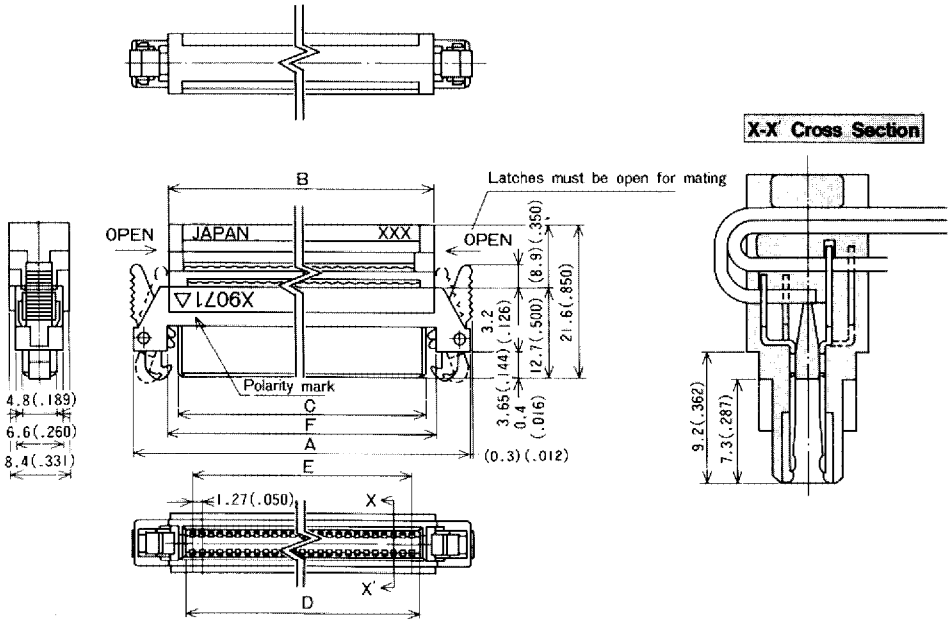

■Dimensions mm(inch)

Pin	A	B	C	D
20	27.83 (1.096)	17.83 (.702)	15.43 (.607)	11.43 (.450)
26	31.64 (1.246)	21.64 (.852)	19.24 (.757)	15.24 (.600)
30	34.18 (1.346)	24.18 (.952)	21.78 (.857)	17.78 (.700)
32	35.45 (1.396)	25.45 (1.002)	23.05 (.907)	19.05 (.750)
34	36.72 (1.446)	26.72 (1.052)	24.32 (.957)	20.32 (.800)
36	37.99 (1.496)	27.99 (1.102)	25.59 (1.007)	21.59 (.850)
40	40.53 (1.596)	30.53 (1.202)	28.13 (1.107)	24.13 (.950)
50	46.88 (1.846)	36.88 (1.452)	34.48 (1.357)	30.48 (1.200)
52	48.15 (1.896)	38.15 (1.502)	35.75 (1.407)	31.75 (1.250)
60	53.23 (2.096)	43.23 (1.702)	40.83 (1.607)	36.83 (1.450)
68	58.31 (2.296)	48.31 (1.902)	45.91 (1.807)	41.91 (1.650)
80	65.93 (2.596)	55.93 (2.202)	53.53 (2.107)	49.53 (1.950)
100	78.63 (3.096)	68.63 (2.702)	66.23 (2.607)	62.23 (2.450)

Specifications

- Insulator : Glass filled 66 Nylon UL94V-0, Black
- Contact : Copper alloy
  Mating area : Gold over Nickel
  Terminal area : Tin over Nickel
- Current rating : 0.5A/pin
- Contact resistance : 30mΩ, Max.
- Withstanding voltage : 650V AC, (1 minute)
- Insulation resistance : 1,000MΩ, 500V DC, Min.
- Recommended cable : AWG28(7/0.127)Flat ribbon cable.

Order Code

88XXE - XXX - XXX X X

- Series
  8822E : Receptacle
  8830E : Plug (Without hooks)
  8831E : Plug (With hooks / Right angle type only)
- No. of contacts
  020, 026
  030, 032
  034, 036
  040, 050
  052, 060
  068, 080
  100
- Contact style
  171 : Receptacle
  170 : Plug
- Gold plating
  None : Flash
  D : 0.25μm or more
  H : 0.76μm or more
- Terminal configuration
  S : Straight
  L : Right angle

*Available upon request

8830E-XXX-170S(Plug/Straight Type)

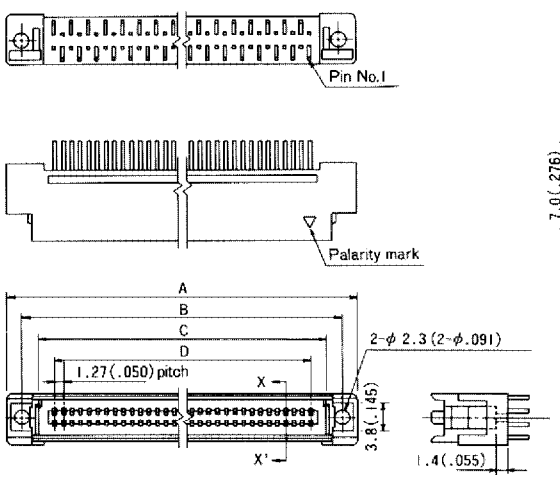

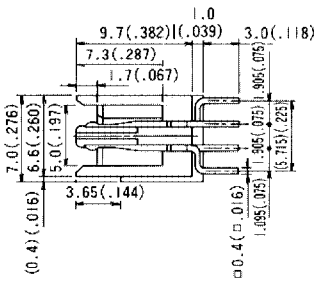

■Dimensions mm(inch)

Pin	A	B	C	D
20	27.83 (1.096)	22.86 (.900)	15.83 (.623)	11.43 (.450)
26	31.64 (1.246)	26.67 (1.050)	19.64 (.773)	15.24 (.600)
30	34.18 (1.346)	29.21 (1.150)	22.18 (.873)	17.78 (.700)
32	35.45 (1.396)	30.48 (1.200)	23.45 (.923)	19.05 (.750)
34	36.72 (1.446)	31.75 (1.250)	24.72 (.973)	20.32 (.800)
36	37.99 (1.496)	33.02 (1.300)	25.99 (1.023)	21.59 (.850)
40	40.53 (1.596)	35.56 (1.400)	28.53 (1.123)	24.13 (.950)
50	46.88 (1.846)	41.91 (1.650)	34.88 (1.373)	30.48 (1.200)
52	48.15 (1.896)	43.18 (1.700)	36.15 (1.423)	31.75 (1.250)
60	53.23 (2.096)	48.26 (1.900)	41.23 (1.623)	36.83 (1.450)
68	58.31 (2.296)	53.34 (2.100)	46.31 (1.823)	41.91 (1.650)
80	65.93 (2.596)	60.96 (2.400)	53.93 (2.123)	49.53 (1.950)
100	78.63 (3.096)	73.66 (2.900)	66.63 (2.623)	62.23 (2.450)

8830E/8831E-XXX-170L(Plug/Right Angle Type)

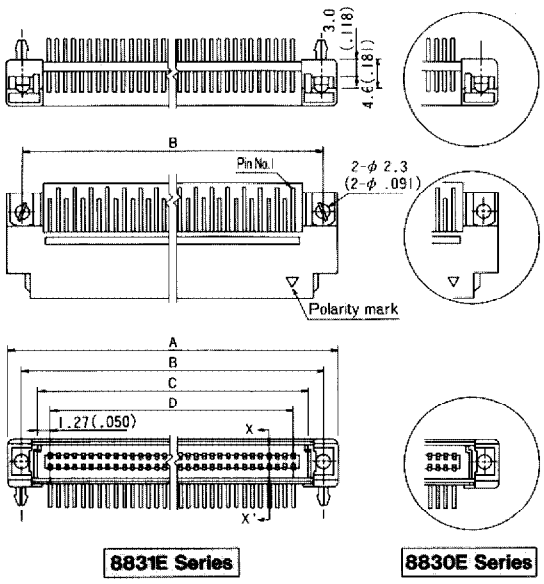

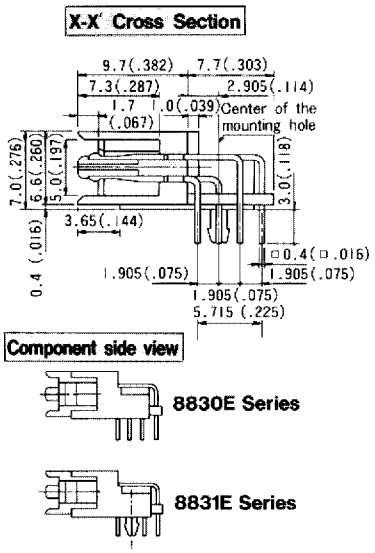

■Dimensions mm(inch)

Pin	A	B	C	D
20	27.83 (1.096)	22.86 (.900)	15.83 (.623)	11.43 (.450)
26	31.64 (1.246)	26.67 (1.050)	19.64 (.773)	15.24 (.600)
30	34.18 (1.346)	29.21 (1.150)	22.18 (.873)	17.78 (.700)
32	35.45 (1.396)	30.48 (1.200)	23.45 (.923)	19.05 (.750)
34	36.72 (1.446)	31.75 (1.250)	24.72 (.973)	20.32 (.800)
36	37.99 (1.496)	33.02 (1.300)	25.99 (1.023)	21.59 (.850)
40	40.53 (1.596)	35.56 (1.400)	28.53 (1.123)	24.13 (.950)
50	46.88 (1.846)	41.91 (1.650)	34.88 (1.373)	30.48 (1.200)
52	48.15 (1.896)	43.18 (1.700)	36.15 (1.423)	31.75 (1.250)
60	53.23 (2.096)	48.26 (1.900)	41.23 (1.623)	36.83 (1.450)
68	58.31 (2.296)	53.34 (2.100)	46.31 (1.823)	41.91 (1.650)
80	65.93 (2.596)	60.96 (2.400)	53.93 (2.123)	49.53 (1.950)
100	78.63 (3.096)	73.66 (2.900)	66.63 (2.623)	62.23 (2.450)

Printed Circuit Board Layout(Component Side View)

■Straight Type

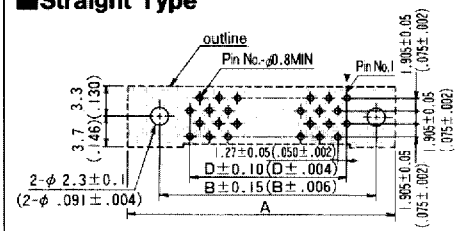

For 20,32,40,36,40,52,60,68,80 and 100 pins

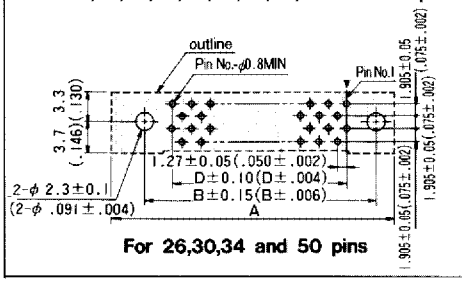

For 26,30,34 and 50 pins

■Right Angle Type

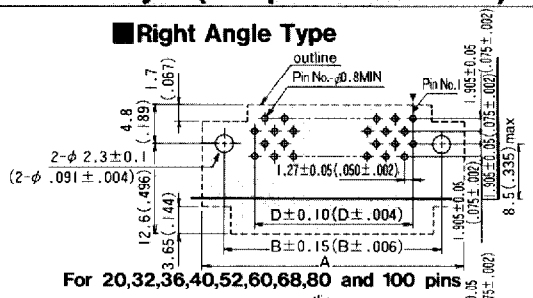

For 20,32,36,40,52,60,68,80 and 100 pins

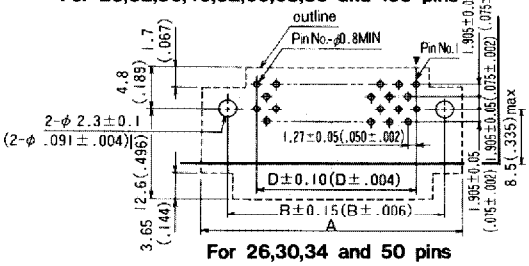

For 26,30,34 and 50 pins

■Dimensions mm(inch)

Pin	A	B	D
20	27.83 (1.096)	22.86 (.900)	11.43 (.450)
26	31.64 (1.246)	26.67 (1.050)	15.24 (.600)
30	34.18 (1.346)	29.21 (1.150)	17.78 (.700)
32	35.45 (1.396)	30.48 (1.200)	19.05 (.750)
34	36.72 (1.446)	31.75 (1.250)	20.32 (.800)
36	37.99 (1.496)	33.02 (1.300)	21.59 (.850)
40	40.53 (1.596)	35.56 (1.400)	24.13 (.950)
50	46.88 (1.846)	41.91 (1.650)	30.48 (1.200)
52	48.15 (1.896)	43.18 (1.700)	31.75 (1.250)
60	53.23 (2.096)	48.26 (1.900)	36.83 (1.450)
68	58.31 (2.296)	53.34 (2.100)	41.91 (1.650)
80	65.93 (2.596)	60.96 (2.400)	49.53 (1.950)
100	78.63 (3.096)	73.66 (2.900)	62.23 (2.450)

8822E/8830E Series Pin Assignment

Order Code

8822E-XXX-171X-XXX X-XX

- Cable assembly code AA,AC,AO,CO
- Cable type
  None : Flat ribbon cable
  *S : Intermittent bonded cable
  *T : Twisted flat cable
- Cable length (L=unit : cm, min 3cm)
- Gold plating
  None : Flash
  D : 0.25μm
  H : 0.76μm
- Contact 171
- No. of contacts 20,26,30,32,34, 40,50,52,60,68,80,100
- Series 8822E : One touch locking ejector system

■8822E-XXX-171X-XXX X-AO

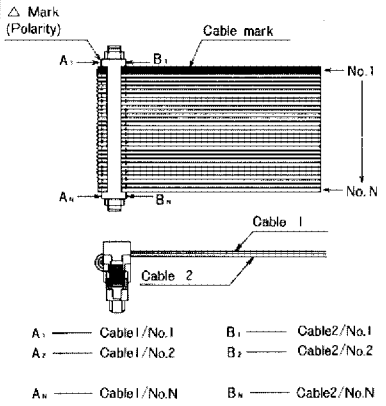

■8822E-XXX-171X-XXX X-CO

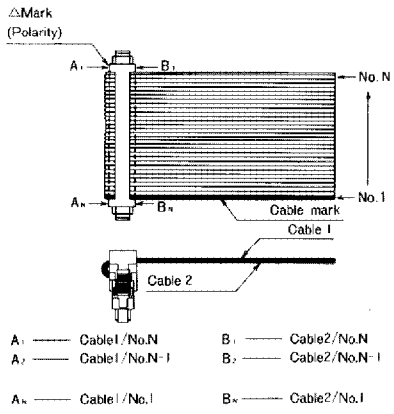

■8822E-XXX-171X-XXX X-AA

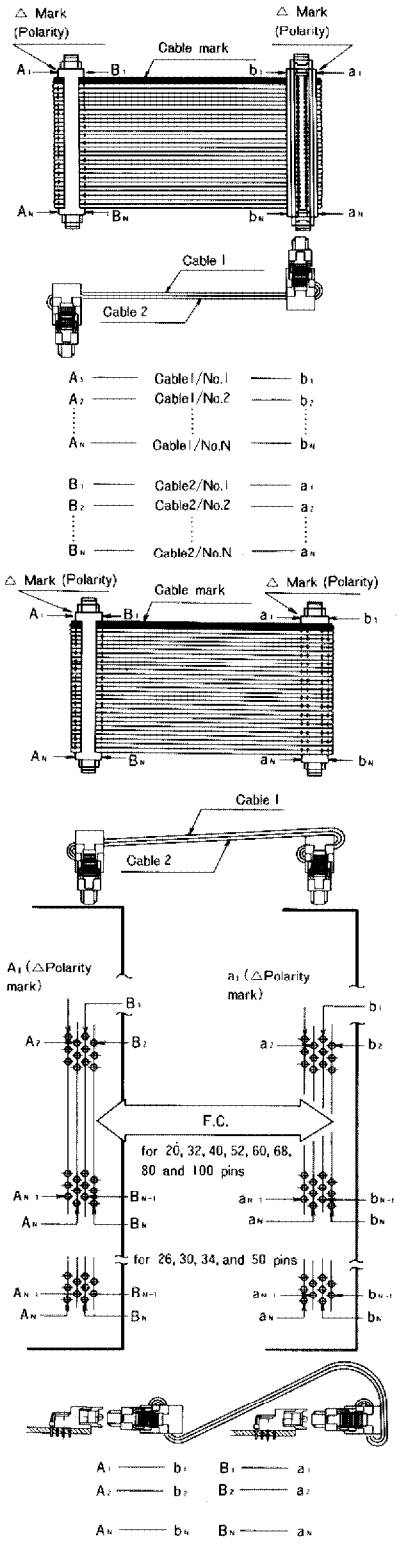

■8822E-XXX-171X-XXX X-AC

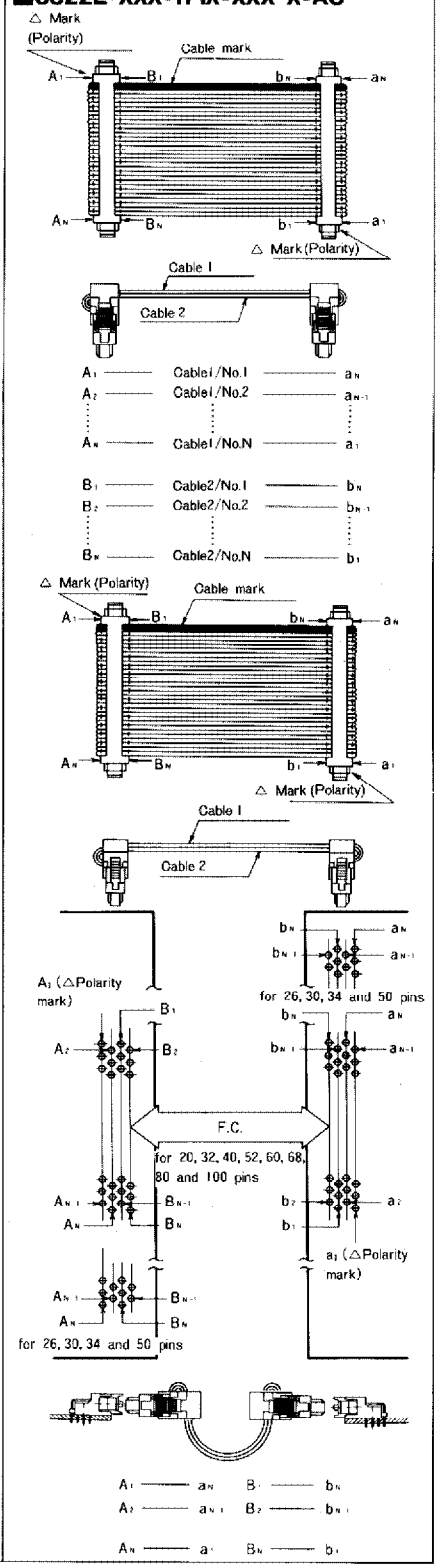

※Connectors are terminated in laminated area of intermittent bonded or twisted flat cable so the cable length must be in 6cm increment.

TERMINATION EQUIPMENT

- ■Hand Press(HP-11)
- ■Cable Trimmer(CT-12)
- ■Locating Fixture(LF-21)

Specifications and dimensions are subject to change without notice.