CLC Transition Card
Version 2A

22-May-00

CDF CLC TRANSITION CARD

VERSION 2A - 22-MAY-2000

C. NELSON

DWG. NO.	SH.	REV

REVISIONS

REV	DESCRIPTION	DATE	APPROVED

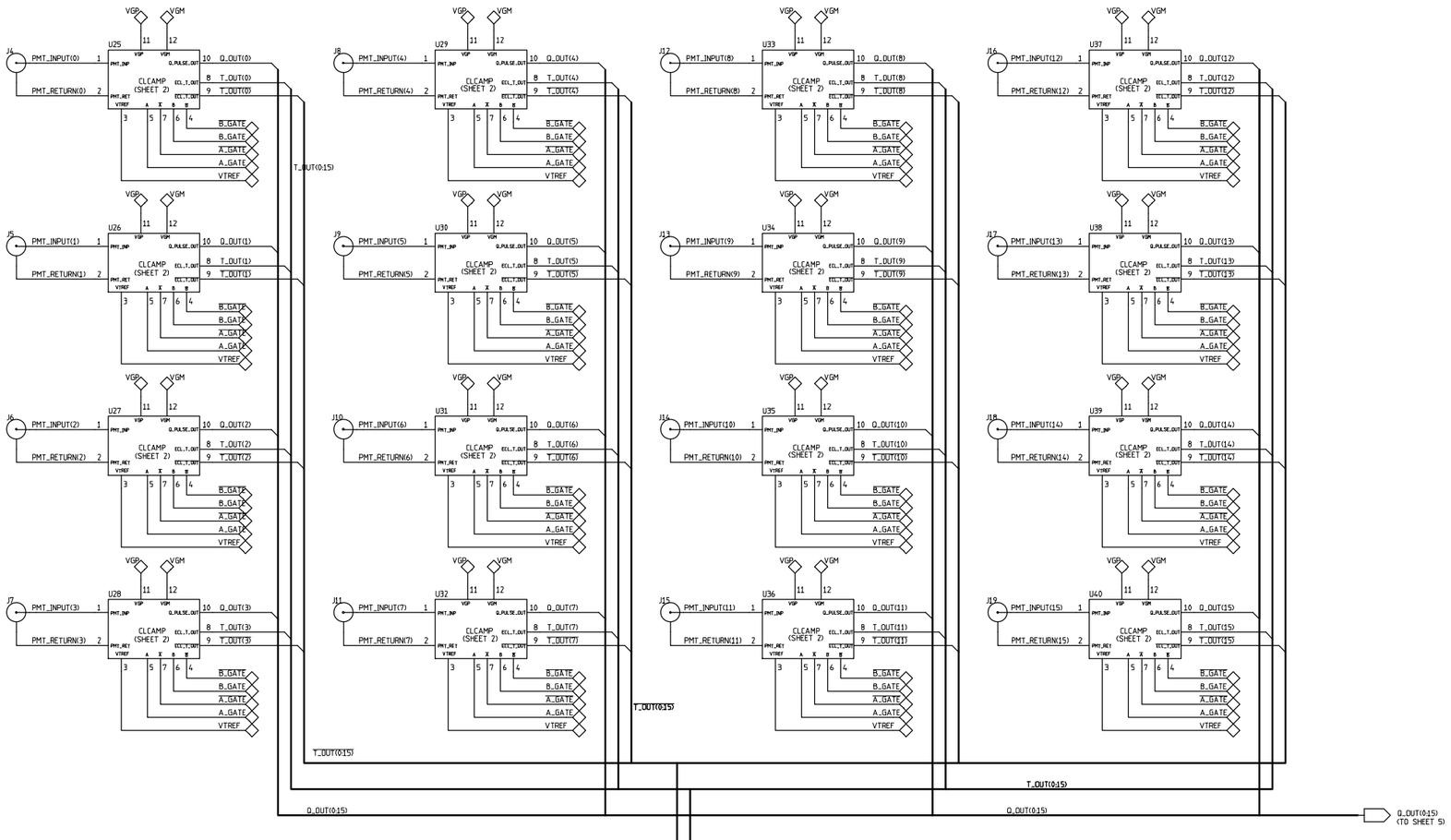

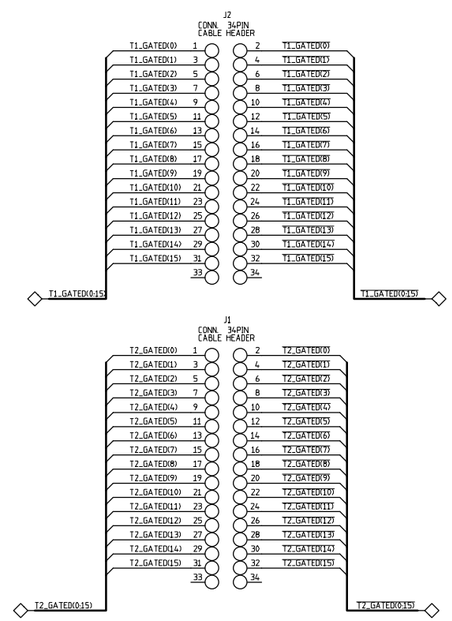

NOTES

SHEET	CONTENTS
1	Signal inputs, signal outputs, connectors
2	Schematic of a single channel
3	Gate receiver/level-shifter
4	Timing pulse gating/stretching
5	Backplane conns, power, DC voltages

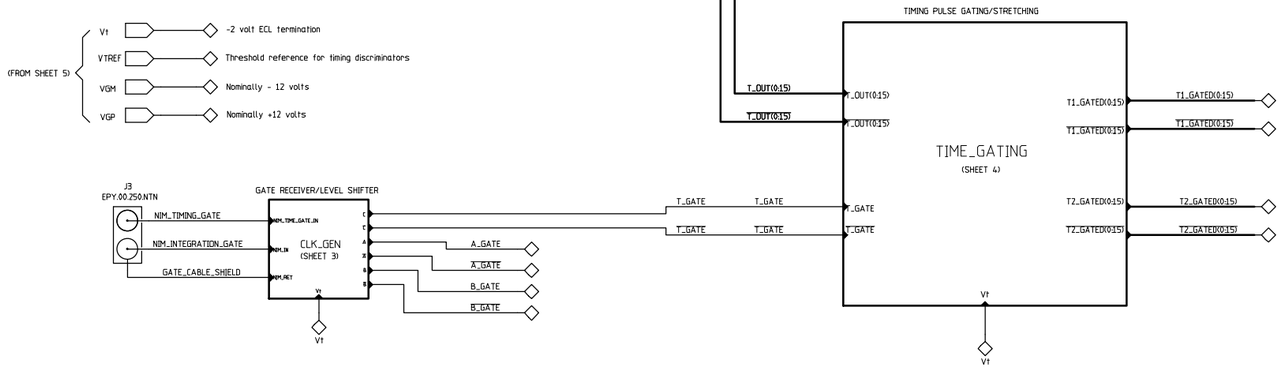

CONTRACT NO.		FERMI NATIONAL ACCELERATOR LABORATORY UNITED STATES DEPARTMENT OF ENERGY
APPROVALS	DATE	CDF CLC TRANSITION CARD VERSION 2A SIGNAL INPUTS, SIGNAL OUTPUTS, CONNECTORS
DRAWN C. NELSON L. DALMONTE	22-MAY-00	
CHECKED		
ISSUED		SIZE D / FSCM NO. / DWG. NO. / REV
		SCALE / SHEET 1 OF 5

DWG. NO.	SH.	REV

REVISIONS

REV	DESCRIPTION	DATE	APPROVED

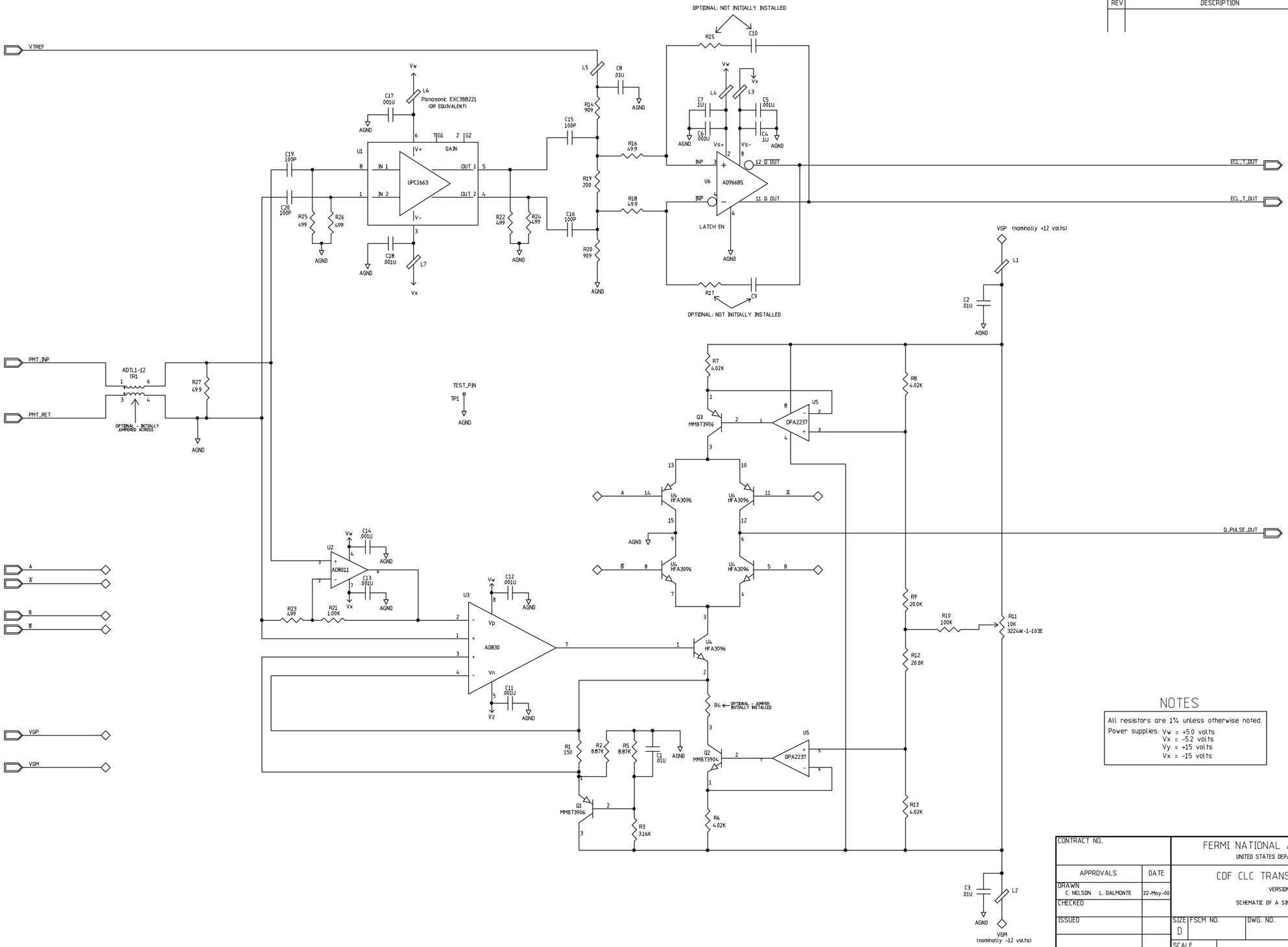

NOTES

All resistors are 1% unless otherwise noted.
Power supplies: Vw = +5.0 volts
Vx = -5.2 volts
Vy = +15 volts
Vx = -15 volts

CONTRACT NO.		FERMI NATIONAL ACCELERATOR LAB UNITED STATES DEPARTMENT OF ENERGY		
APPROVALS	DATE	CDF CLC TRANSITION BOARD VERSION 2A SCHEMATIC OF A SINGLE CHANNEL		
DRAWN C. NELSON L. DALMONTE	22-May-00			
CHECKED				
ISSUED		SIZE D	FSCM NO.	DWG. NO.	REV
		SCALE		SHEET 2 OF 5

REVISIONS			
REV	DESCRIPTION	DATE	APPROVED

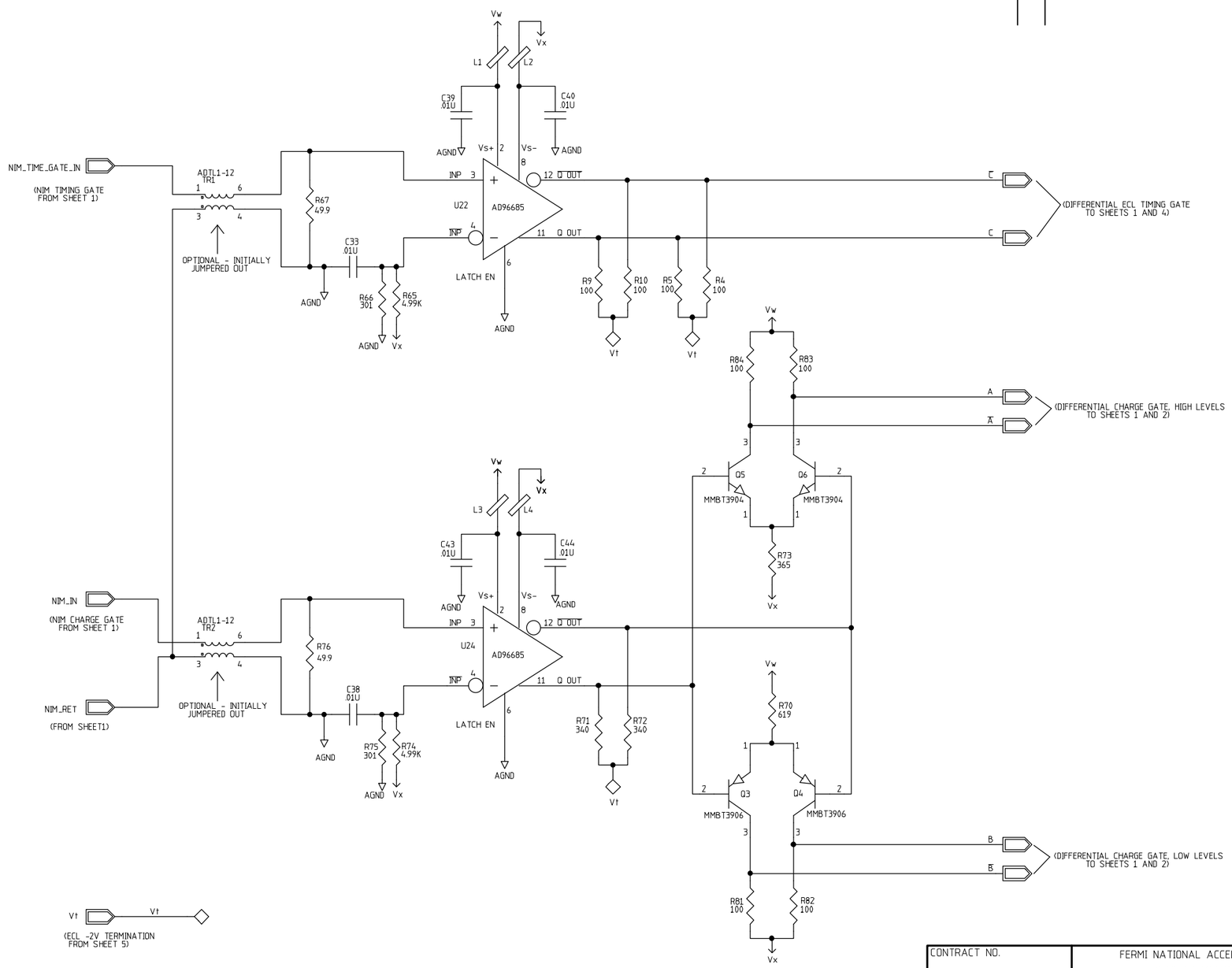

CONTRACT NO.		FERMI NATIONAL ACCELERATOR LABORATORY UNITED STATES DEPARTMENT OF ENERGY		
APPROVALS	DATE	CDF CLC TRANSITION CARD VERSION 2A GATE RECEIVER/LEVEL SHIFTER		
DRAWN C. NELSON L. DALMONTE	22-MAY-00			
CHECKED		SIZE C	FSCM NO.	DWG. NO.	REV
ISSUED		SCALE		SHEET 3 OF 5

DWG. NO.	SH.	REV

REVISIONS

REV	DESCRIPTION	DATE	APPROVED

NOTE: ALL ECL PULL-DOWN RESISTORS TO Vx (-5.2 VOLTS) ARE 340 OHMS.
ALL ECL PULL-DOWN RESISTORS TO Vt (-2 VOLTS) ARE 100 OHMS.

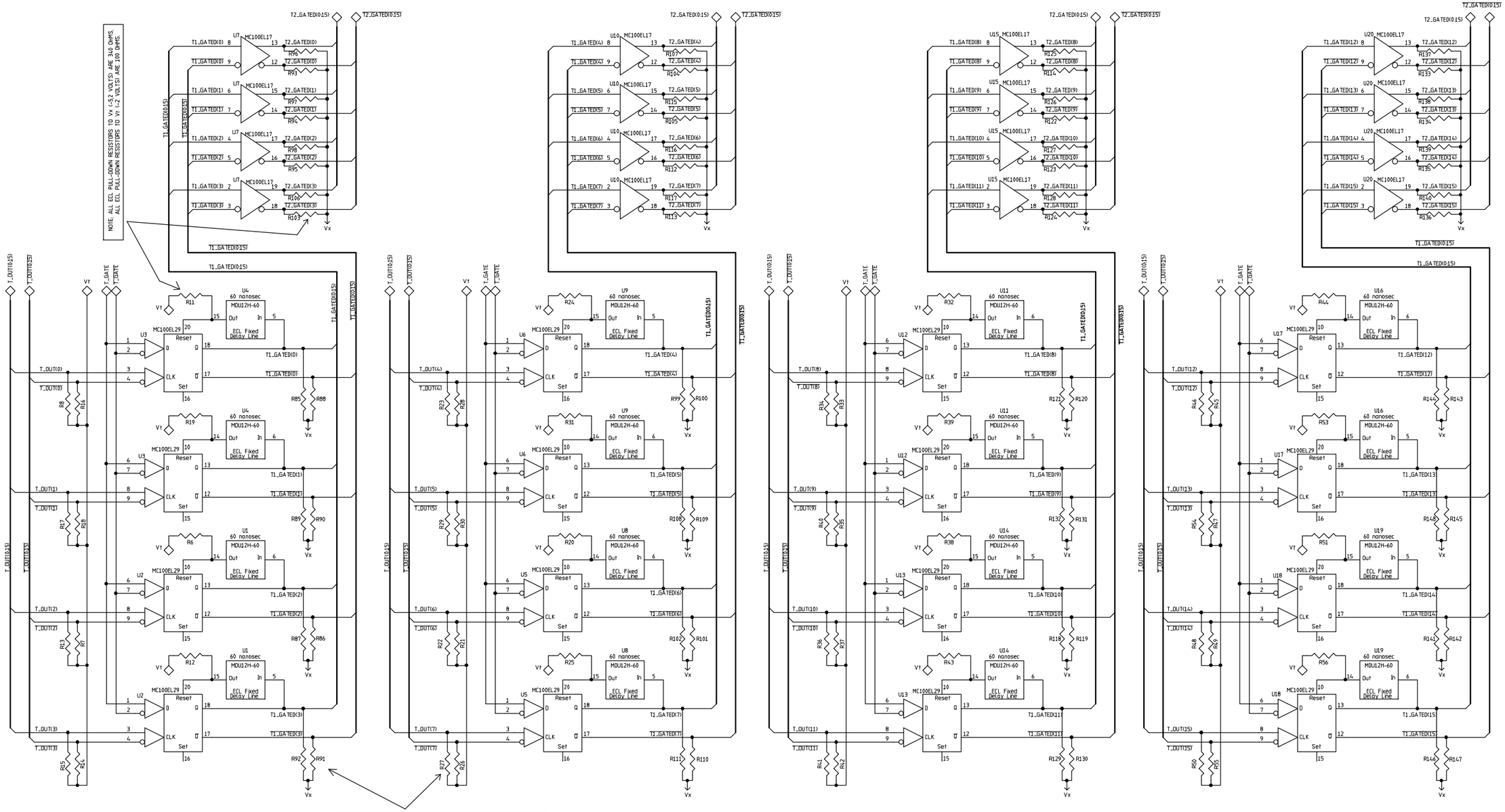

NOTE: ALL ECL PULL-DOWN RESISTORS TO Vx (-5.2 VOLTS) ARE 340 OHMS.
ALL ECL PULL-DOWN RESISTORS TO Vt (-2 VOLTS) ARE 100 OHMS.

(FROM SHEET 1)

T_OUT(0:15) — T_OUT(0:15)
T_OUT(0:15) — T_OUT(0:15)
T_GATE — T_GATE
T_GATE — T_GATE
Vt — Vt
(ECL -2V TERMINATION FROM SHEET 5)

(BYPASSING FOR ECL CHIPS)

C20 .01U, C30 .01U, C28 .01U, C22 .01U, C14 .01U, C11 .01U, C24 .01U, C21 .01U, C15 .01U, C12 .01U, C27 .01U, C23 .01U, C17 .01U, C26 .01U, C19 .01U, C16 .01U, C29 .01U, C25 .01U, C18 .01U, C13 .01U

AGND — Vx

T1_GATED(0:15) — T1_GATED(0:15)
T1_GATED(0:15) — T1_GATED(0:15)
T2_GATED(0:15) — T2_GATED(0:15)
T2_GATED(0:15) — T2_GATED(0:15)
(TO SHEET 1)

CONTRACT NO.		FERMI NATIONAL ACCELERATOR LABORATORY UNITED STATES DEPARTMENT OF ENERGY		
APPROVALS	DATE	CDF CLC TRANSITION CARD VERSION 2A TIMING PULSE GATING/STRETCHING		
DRAWN C. NELSON L. DALMONTE	22-MAY-00			
CHECKED				
ISSUED		SIZE D	FSCM NO.	DWG. NO.	REV
		SCALE		SHEET 4 OF 5

DWG. NO.	SH.	REV

REVISIONS

REV	DESCRIPTION	DATE	APPROVED

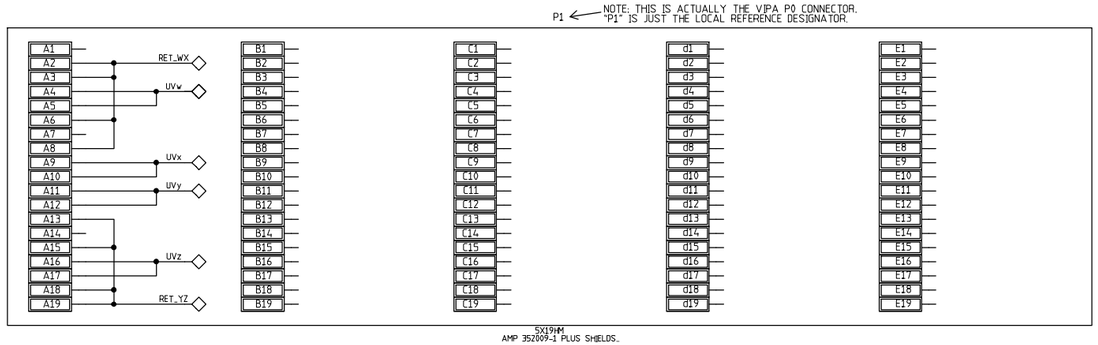

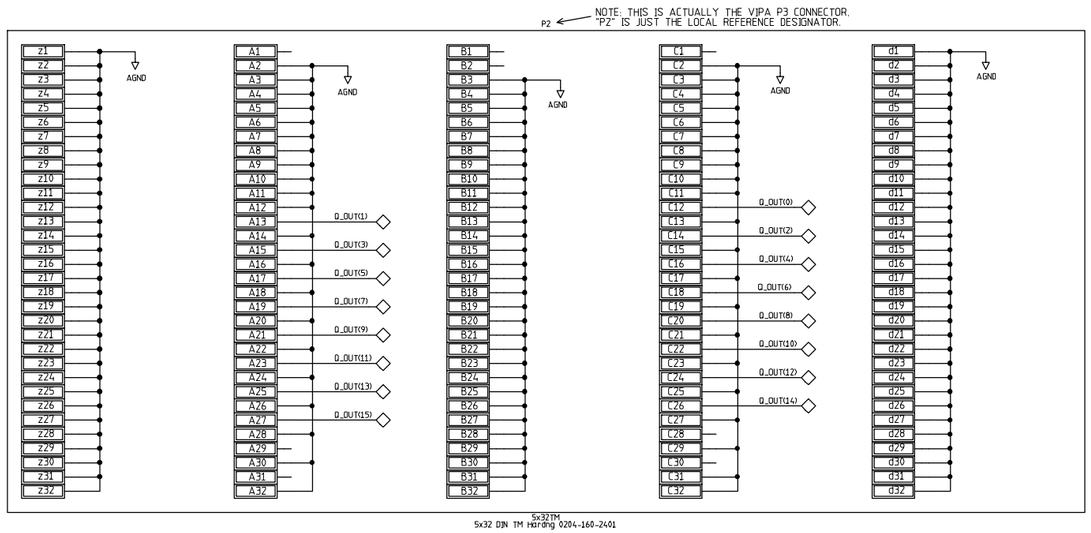

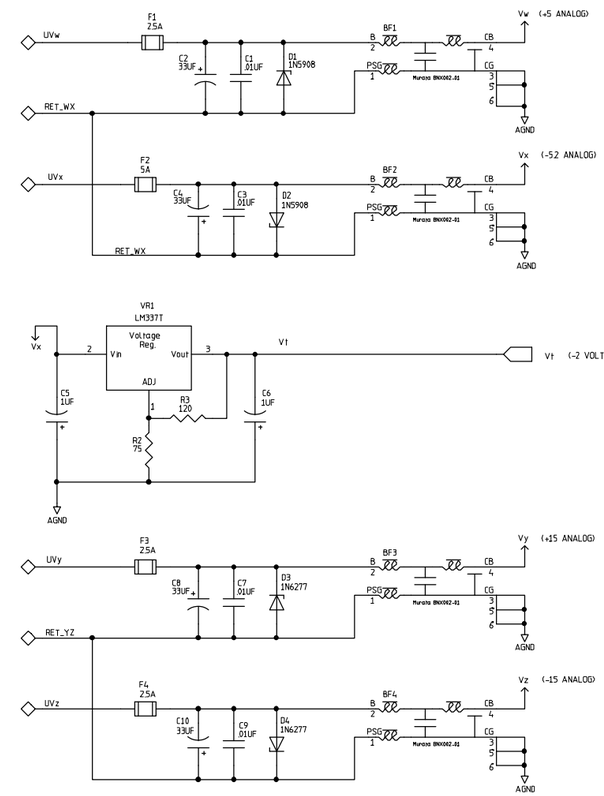

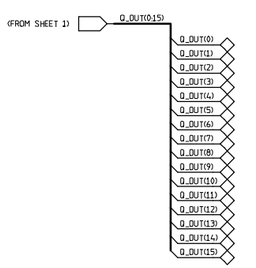

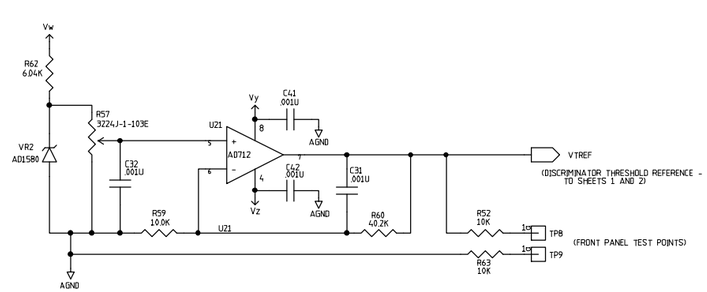

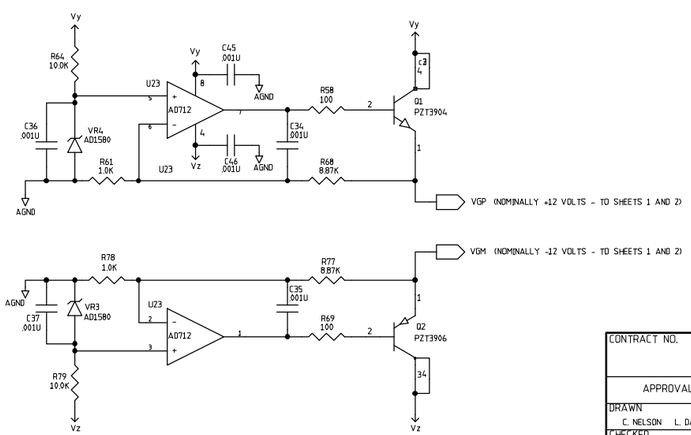

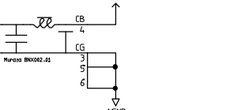

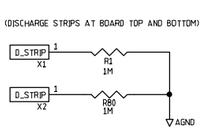

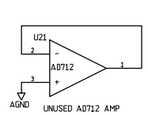

NOTES

All resistors are 1% unless otherwise noted.
Power supplies: Vw = +5.0 volts
Vx = -5.2 volts
Vy = +15 volts
Vz = -15 volts

CONTRACT NO.		FERMI NATIONAL ACCELERATOR LABORATORY UNITED STATES DEPARTMENT OF ENERGY		
APPROVALS	DATE	CDF CLC TRANSITION CARD VERSION 2A BACKPLANE CONNECTORS, POWER, DC VOLTAGES		
DRAWN C. NELSON L. DALMONTE	22-MAY-00			
CHECKED				
ISSUED		SIZE D	FSCM NO.	DWG. NO. REV
		SCALE		SHEET 5 OF 5

CDF CLC TRANSITION CARD V.2A - 22-MAY-00

VIEW OF ENTIRE BOARD

TOP VIEW

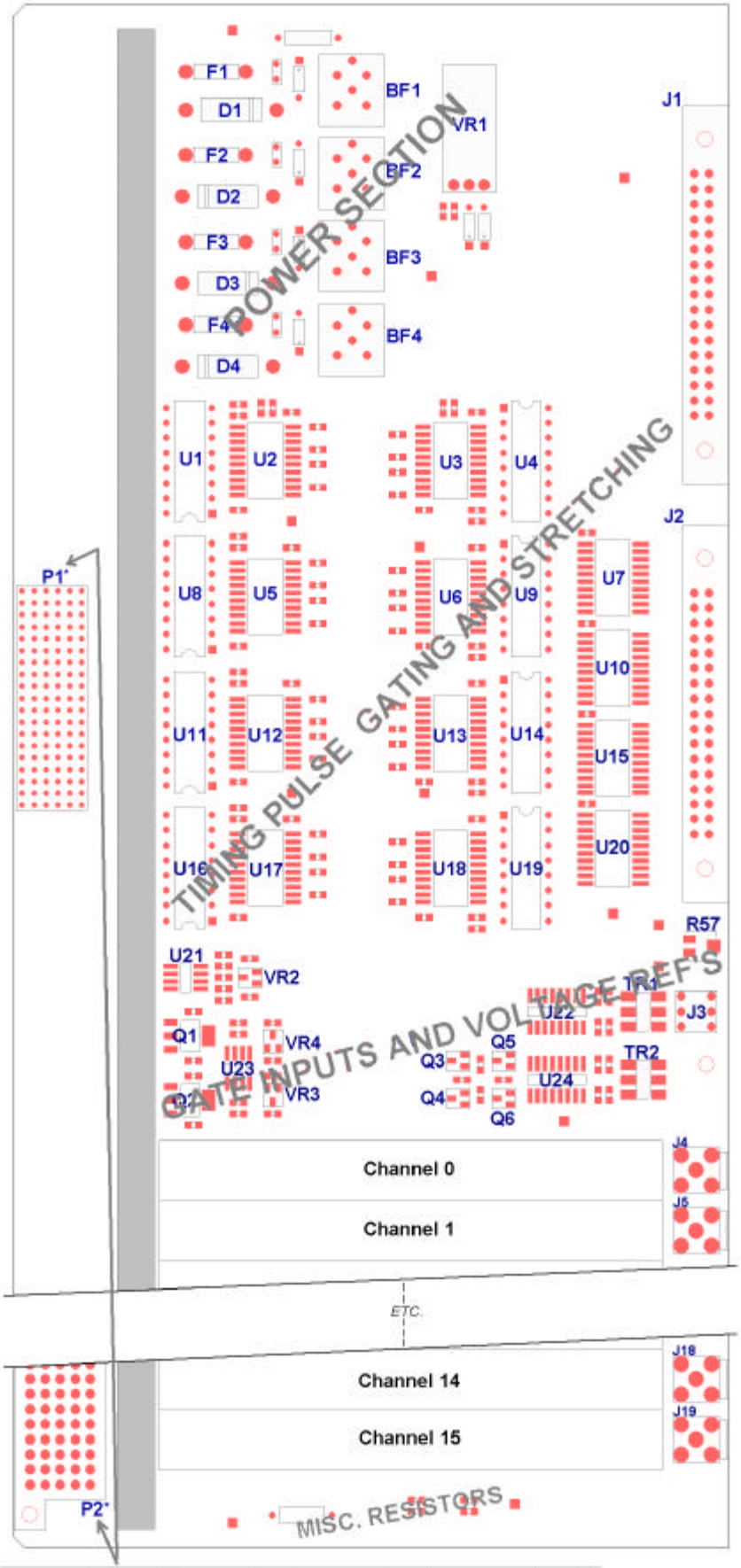

NOTE: "P1" AND "P2" ARE SCHEMATIC REFERENCE DESIGNATORS ONLY. THE VIPA DESIGNATIONS FOR THESE CONNECTORS ARE "P0" AND "P3", RESPECTIVELY.

CDF CLC TRANSITION CARD V.2A - 22-MAY-00

POWER SECTION

TOP VIEW

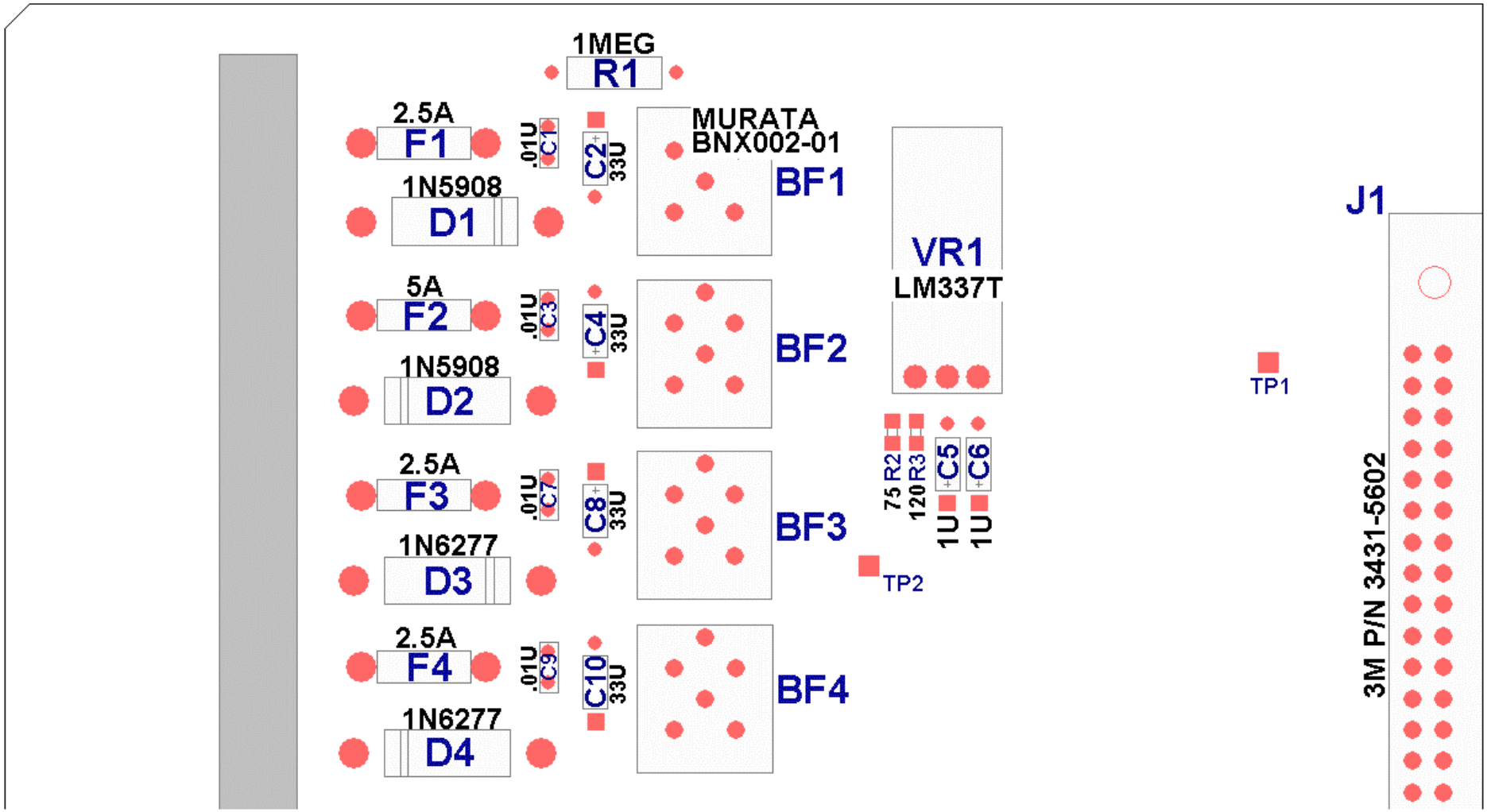

CDF CLC TRANSITION CARD V.2A - 22-MAY-00

TIMING PULSE GATING AND STRETCHING SECTION

TOP VIEW

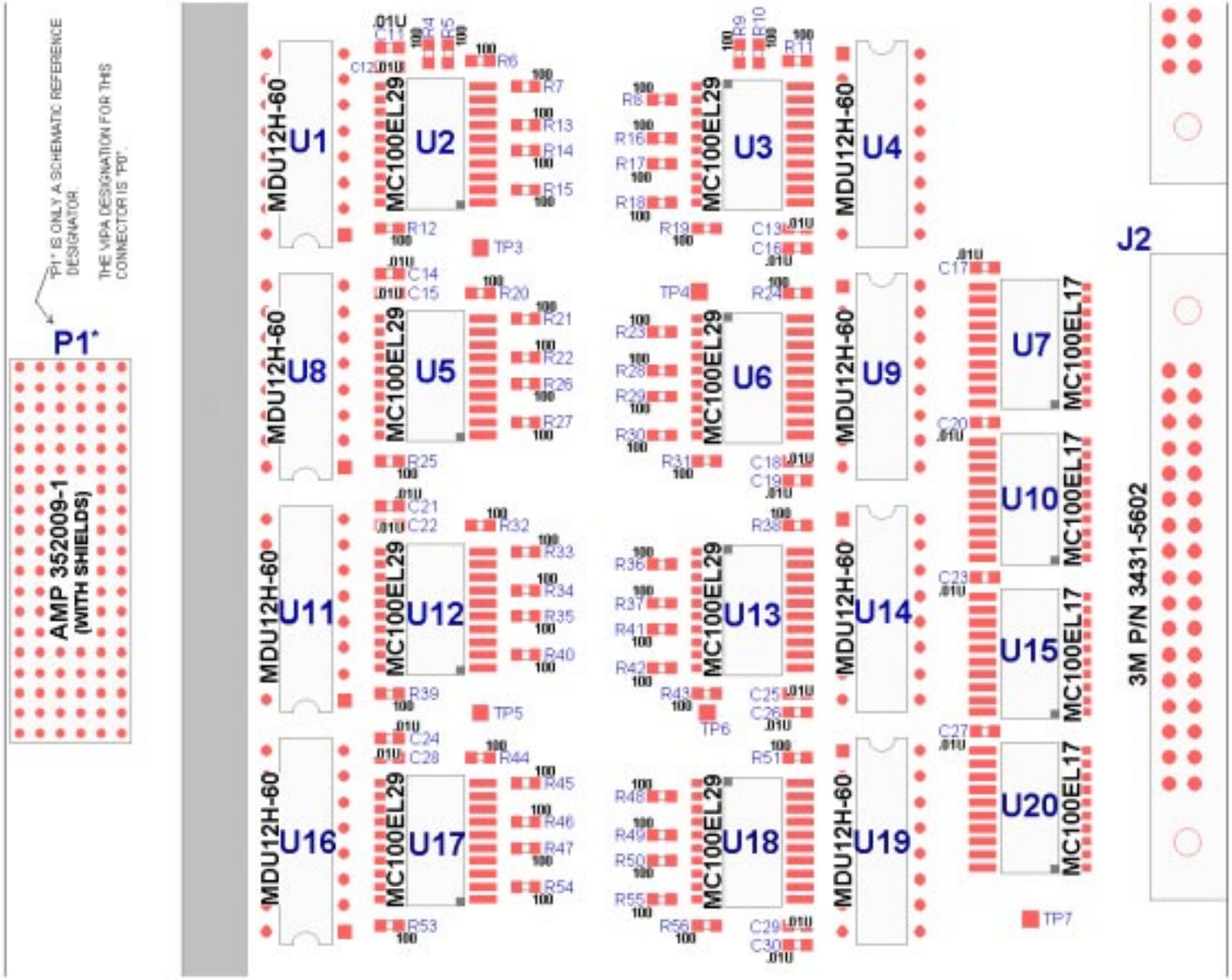

CDF CLC TRANSITION CARD V.2A - 22-MAY-00

TIMING PULSE GATING AND STRETCHING SECTION

BOTTOM VIEW

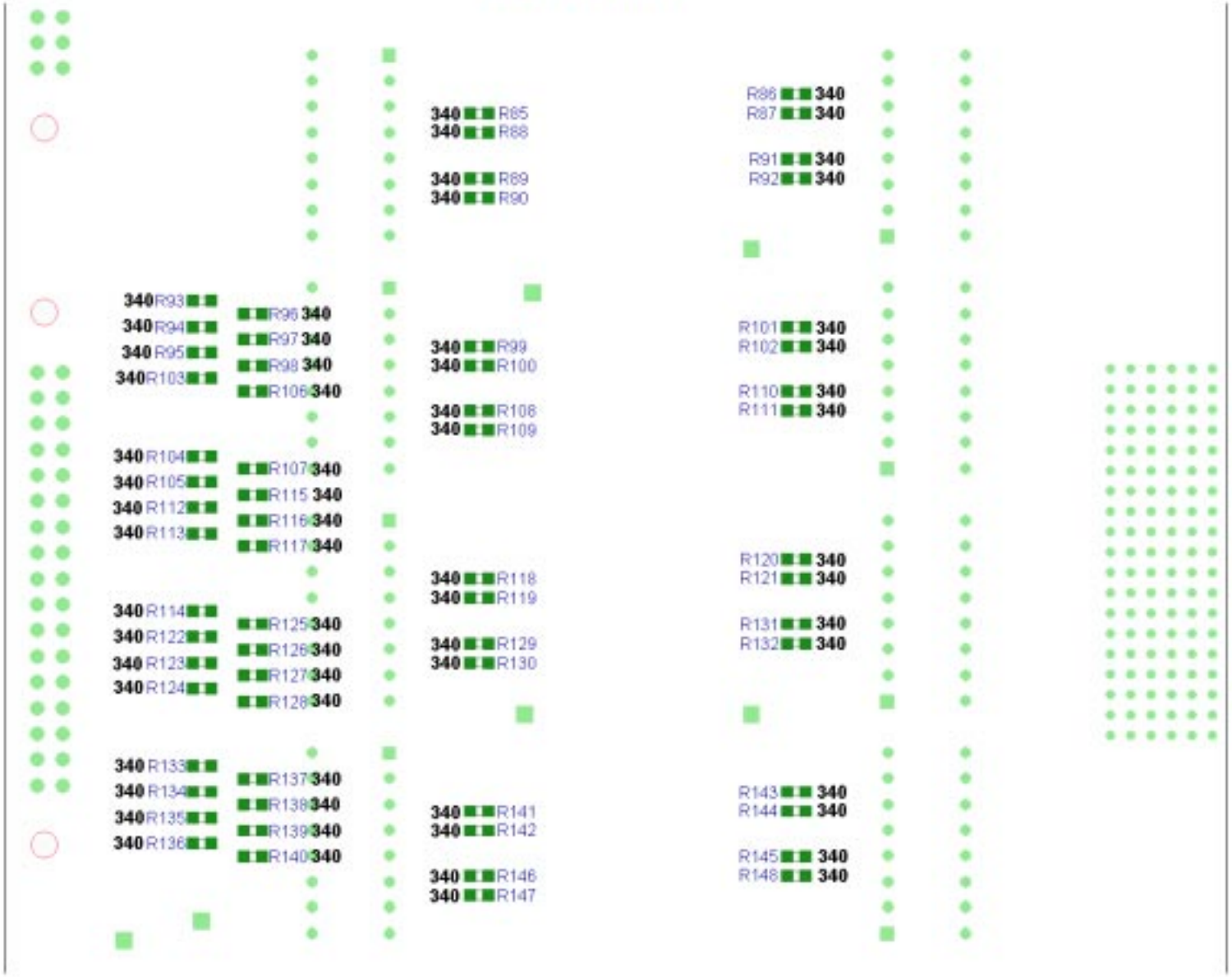

CDF CLC TRANSITION CARD V.2A - 22-MAY-00

GATE INPUTS AND VOLTAGE REFERENCES

TOP VIEW

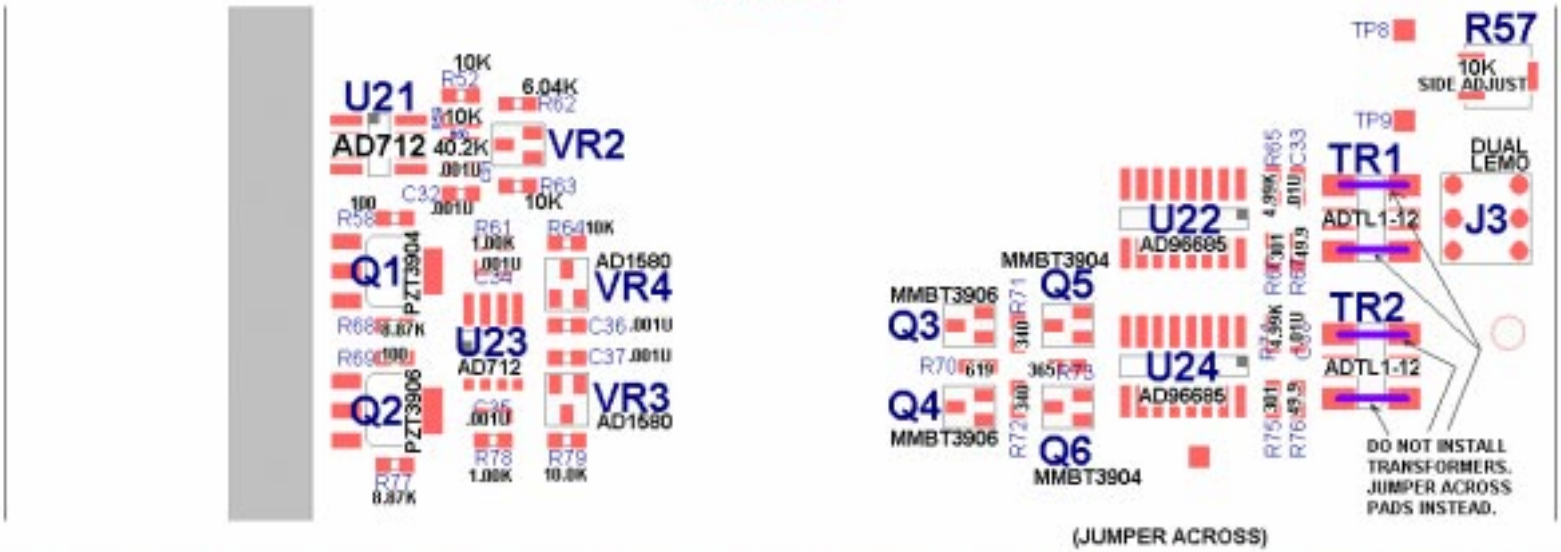

MISC. RESISTORS AT BOARD BOTTOM

TOP VIEW

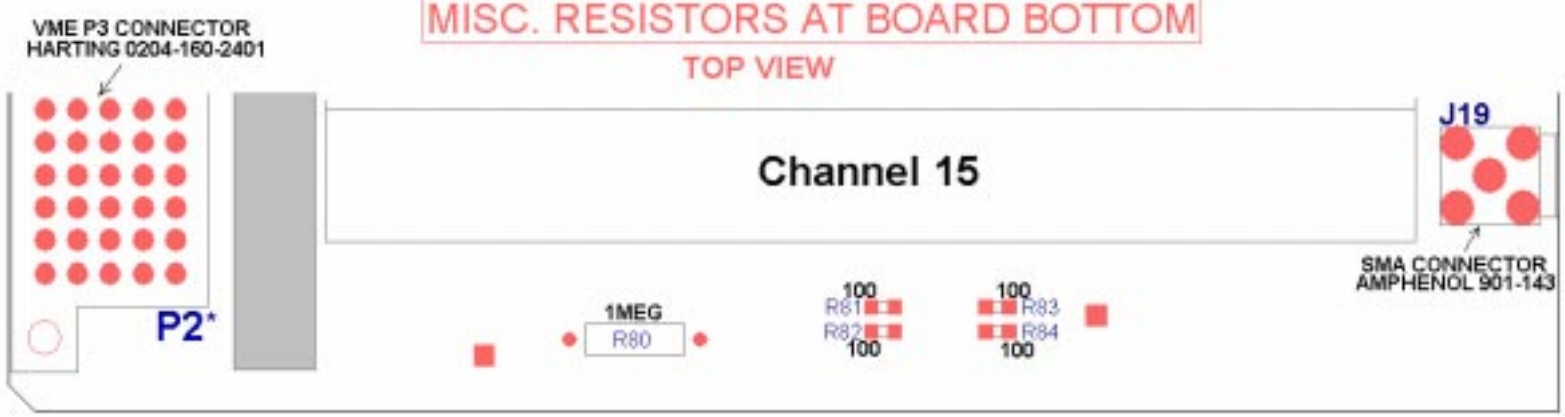

CDF CLC TRANSITION CARD V.2A - 22-MAY-00

GATE INPUTS AND VOLTAGE REFERENCES

BOTTOM VIEW

V.2A CLC TRANSITION CARD

SINGLE CHANNEL ASSEMBLY DRAWING

C.N. -- 22-MAY-2000

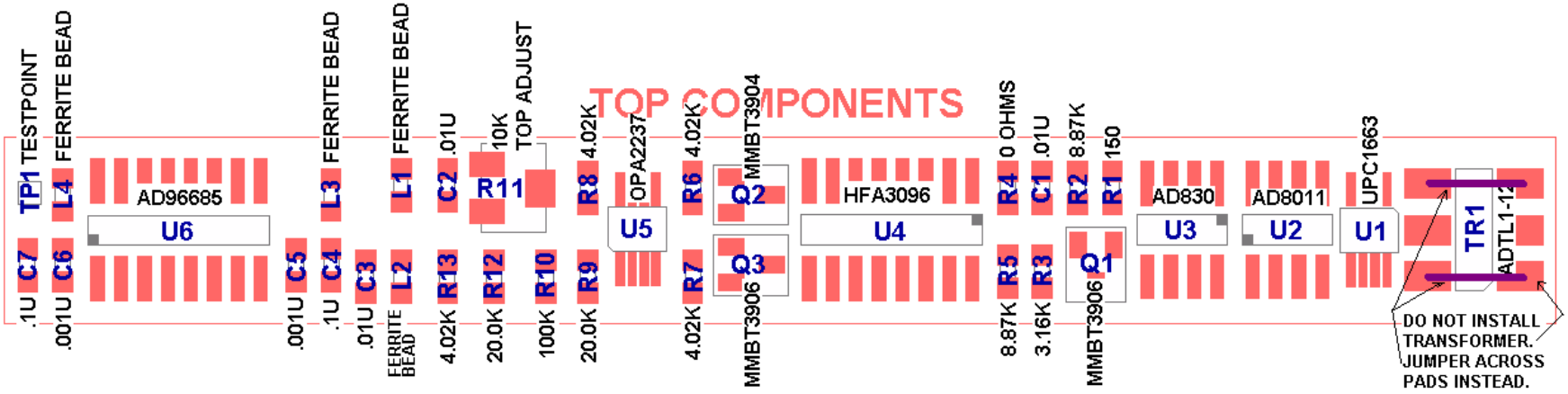

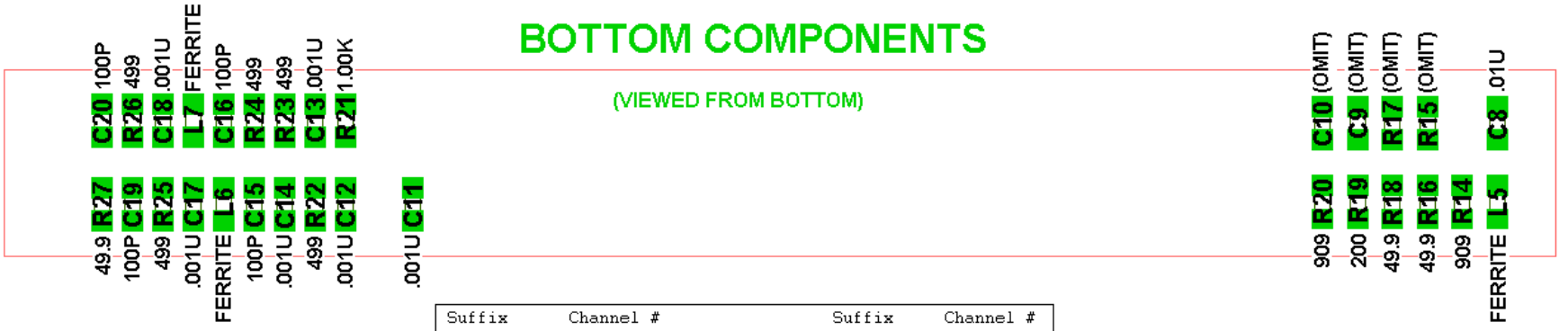

Suffix	Channel #	Suffix	Channel #
"A"	0	"I"	8
"B"	1	"J"	9
"C"	2	"K"	10
"D"	3	"L"	11
"E"	4	"M"	12
"F"	5	"N"	13
"G"	6	"O"	14
"H"	7	"P"	15

Version 2A CLC Transition Card Parts
Listed by Part Type
Updated 6/29/00

RESISTORS

Value	Tol.	Temperature Coefficient	Case	No / Bd.	Reference Designators
0 OHM JUMPER			0603	16	R4(A-P)
0 OHM JUMPER ***For jumpering across TR1(A-P), TR1 and TR2***			1206	36	(none)
49.9 OHM,	1%,	100 PPM/°C	0603	50	R16(A-P), R18(A-P), R27(A-P), R67, R76
75.0 OHM,	1%,	100 PPM/°C	0603	1	R2
100 OHM,	1%,	100 PPM/°C	0603	60	R4, R5, R6, R7, R8, R9, R10, R11, R12, R13, R14, R15, R16, R17, R18, R19, R20, R21, R22, R23, R24, R25, R26, R27, R28, R29, R30, R31, R32, R33, R34, R35, R36, R37, R38, R39, R40, R41, R42, R43, R44, R45, R46, R47, R48, R49, R50, R51, R53, R54, R55, R56, R58, R69, R71, R72, R81, R82, R83, R84
120 OHM,	1%,	100 PPM/°C	0603	1	R3
150 OHM,	1%,	100 PPM/°C	0603	16	R1(A-P)
200 OHM,	1%,	100 PPM/°C	0603	16	R19(A-P)
301 OHM,	1%,	100 PPM/°C	0603	3	R66, R75
316 OHM,	1%,	100 PPM/°C	0603	16	R3(A-P)
340 OHM,	1%,	100 PPM/°C	0603	64	R85, R86, R87, R88, R89, R90, R91, R92, R93, R94, R95, R96, R97, R98, R99, R108, R109, R100, R101, R102, R103, R104, R105, R106, R107, R110, R111, R112, R113, R114, R115, R116, R117, R118, R119, R120, R121, R122, R123, R124, R125, R126, R127, R128, R129, R130, R131, R132, R133, R134, R135, R136, R137, R138, R139, R140, R141, R142, R143, R144, R145, R146, R147, R148,
365 OHM,	1%,	100 PPM/°C	0603	1	R73
499 OHM,	1%,	100 PPM/°C	0603	80	R22(A-P), R23(A-P), R24(A-P), R25(A-P), R26(A-P)
619 OHM,	1%,	100 PPM/°C	0603	1	R70
909 OHM,	1%,	100 PPM/°C	0603	32	R14(A-P), R20(A-P)
1.00K OHM,	1%,	100 PPM/°C	0603	18	R21(A-P), R61, R78
4.02K OHM,	1%,	100 PPM/°C	0603	64	R6(A-P), R7(A-P). R8(A-P), R13(A-P)

4.99K OHM,	1%,	100 PPM/°C	0603	2	R65, R74
6.04K OHM,	1%,	100 PPM/°C	0603	1	R62
8.87K OHM,	1%,	100 PPM/°C	0603	34	R2(A-P), R5(A-P), R68, R77
10.0K OHM,	1%,	100 PPM/°C	0603	5	R52, R59, R63, R64, R79
20.0K OHM,	1%,	100 PPM/°C	0603	32	R9(A-P), R12(A-P)
40.2K OHM,	1%,	100 PPM/°C	0603	1	R60
100K OHM			0603	16	R10(A-P)
1MEG OHM			AXIAL, .4” LS	2	R1, R80
(UNDETERMINED) ***Optional – do not install.***			0603	32	R15(A-P), R17(A-P)

CAPACITORS

Value	Tol.	Type	Temp. Char.	DCWV	Case	No / Bd.	Reference Designators
100 PF,	10%,	CERAMIC,	NPO		0603	64	C15(A-P), C16(A-P), C19(A-P), C20(A-P)
.001 UF,	10%,	CERAMIC,	X7R		0603	138	C5(A-P), C6(A-P), C11(A-P), C12(A-P), C13(A-P), C14(A-P), C17(A-P), C18(A-P), C31, C32, C34, C35, C36, C37, C41, C42, C45. C46,
.01 UF,	10%,	CERAMIC,	X7R		0603	90	C1(A-P), C2(A-P), C3(A-P), C8(A-P), C11, C12, C13, C14, C15, C16, C17, C18, C19, C20, C21, C22, C23, C24, C25, C26, C27, C28, C29, C30, C33, C38, C39, C40, C43, C44
.01 UF,		CERAMIC	X7R		RADIAL, .100” LS	4	C1, C3, C7, C9
.1 UF,		CERAMIC,	X7R		0603	32	C4(A-P), C7(A-P)
1 UF,		TANTALUM			RADIAL, .250” LS	2	C5, C6
33 UF,		TANTALUM			RADIAL, .250” LS	4	C2M C4M C8, C10
(UNDETERMINED) ***Optional – do not install.***					0603	32	C9(A-P), C10(A-P)

MISCELLANEOUS PASSIVE COMPONENTS

Component Description	Package/ Case	No / Bd.	Manufacturer	Part No.	Reference Designators
COMMON-MODE CHOKE ***Optional – do not install.*** ***> Solder 0 Ohm jumpers across pins 3 and 4, and across pins 1 and 6.***		18	MINI-CIRCUITS	ADTL1-12	TR1(A-P), TR1, TR2
FUSE, 2.5 AMP, FAST-ACTING	AXIAL, 0.4” LS	3			F1, F3, F4
FUSE, 5 AMP, SLOW BLOW	AXIAL, 0.4” LS	1			F2

VME AUX. CARD “P3” CONNECTOR		1	HARTING	0204 160 1101	P2
VME AUX. CARD “P0” CONNECTOR		1	ERNI	064784	P1
EMI SUPPRESSION FILTER		6	MURATA	BNX002-01	BF1, BF2, BF3, BF4
SMA RECEPTACLE, PCBOARD, ANGLE		16	AMPHENOL (DIGIKEY	901-143-6-RFX ARFX1232-ND)	J4, J5, J6, J7, J8, J9, J10, J11, J12, J13, J14, J15, J16, J17, J18, J19
FERRITE BEAD, 220 OHMS @ 100MHZ	0603	116	PANASONIC (DIGIKEY	EXC3BB221U P10188TR-ND)	L1(A-P), L2(A-P), L3(A-P), L4(A-P), L5(A-P), L6(A-P), L7(A-P), L1, L2, L3, L4
SMD TRIM POT., 10K OHM, SIDE-ADJUST	4 mm	1	BOURNS	3224J-1-103E	R57
SMD TRIM POT., 10K OHM, TOP-ADJUST	4 mm	16	BOURNS (DIGIKEY	3224W-1-103E 04F8031)	R11(A-P)
34 PIN PCB RIGHT ANGLE CONNECTOR, WITH LATCHES		2	3M	3431-5602 3431-5302 (?)	J1, J2
DUAL LEMO RECEPT., PCBOARD		1	LEMO	EPY.00.250.NTN	J3
VME STIFFENER BAR		1	FNAL	(N/A)	ST1

TRANSISTORS, INTEGRATED CIRCUITS, ETC.

Component Description	Case	No / Bd.	Manufacturer	Part No.	Reference Designators
THREE TERMINAL NEGATIVE OUTPUT ADJ. VOLTAGE REGULATOR	TO-220	1	NATIONAL SEMI. MOTOROLA	LM337T LM337T	VR1
1.2V PRECISION SHUNT VOLTAGE REF	SOT-23	3	ANALOG DEVICES	AD1580ART	VR2, VR3, VR4
DUAL PRECISION BIFET OP-AMP	8-PIN SOIC	2	ANALOG DEVICES	AD712JR	U21, U23
300MHZ CURRENT FEEDBACK OP-AMP	8-PIN SOIC	16	ANALOG DEVICES	AD8011AR	U2(A-P)
HIGH SPEED, VIDEO DIFFERENCE AMPLIFIER	8-PIN SOIC	16	ANALOG DEVICES	AD830JR	U3(A-P)
ULTRAFAST COMPARATOR, ECL OUT	16-PIN SOIC	18	ANALOG DEVICES	AD96685B5	U6(A-P), U22, U24
DUAL ECL DELAY LINE, 60 NSEC.	16-PIN DIP	8	DATA DELAY DEV.	MDU12H-60	U1, U4, U8, U9, U11, U14, U16, U19
QUAD DIFF. ECL RECEIVER	20-PIN SOIC	4	ON SEMI. *SYNERGY SEMI.*	MC100EL17 *SY100EL17V*	U7, U10, U15, U20

TRANSIENT ABSORBER, 6.2 VOLT	41A	2	ON SEMI.	1N5908	D1, D2
TRANSIENT ABSORBER, 18 VOLT	41A	2	ON SEMI.	1N6277A	D3, D4
WIDEBAND DIFFERENTIAL I/O AMP.	8-PIN SSOP	16	NEC	µPC1663GV-E1	U1(A-P)
DUAL DIFF. ECL D FLIP-FLOP	20-PIN SOIC	8	*SYNERGY SEMI.* ON SEMI.	*SY100EL29V* MC100EL29	U2, U3, U5, U6, U12, U13, U17, U18
RF TRANS. ARRAY -- 3 NPN, 2 PNP	16-PIN SOIC	16	HARRIS	HFA3096B	U4(A-P)
GENERAL PURPOSE NPN TRANSISTOR	SOT-223	1	FAIRCHILD	PZT3904	Q1
GENERAL PURPOSE PNP TRANSISTOR	SOT-223	1	FAIRCHILD	PZT3906	Q2
GENERAL PURPOSE PNP TRANSISTOR	SOT-23	34	FAIRCHILD (DIGIKEY	MMBT3906 MMBT3906DICT-ND)	Q1A-Q1P, Q3A-Q3P, Q3, Q4
GENERAL PURPOSE NPN TRANSISTOR	SOT-23	18	FAIRCHILD (DIGIKEY ND)	MMBT3904 MMBT3904DICT-	Q2A-Q2P, Q5, Q6
DUAL MICRO-SIZE OP-AMP	8-PIN MSOP	16	BURR-BROWN	OPA2237EA	U5(A-P)

NOTES:
(1)