PMT Calibration @ FNAL (status report)

Y. Oh and I.Vila

- Outline
  - Test layout (second TDC have been added).
  - Database parameters.
  - Gain vs. HV.
  - Timing Resolution vs. Disc. Threshold.
  - Calibration Steps (time budget).

PMT Calibration @ B0: current setup

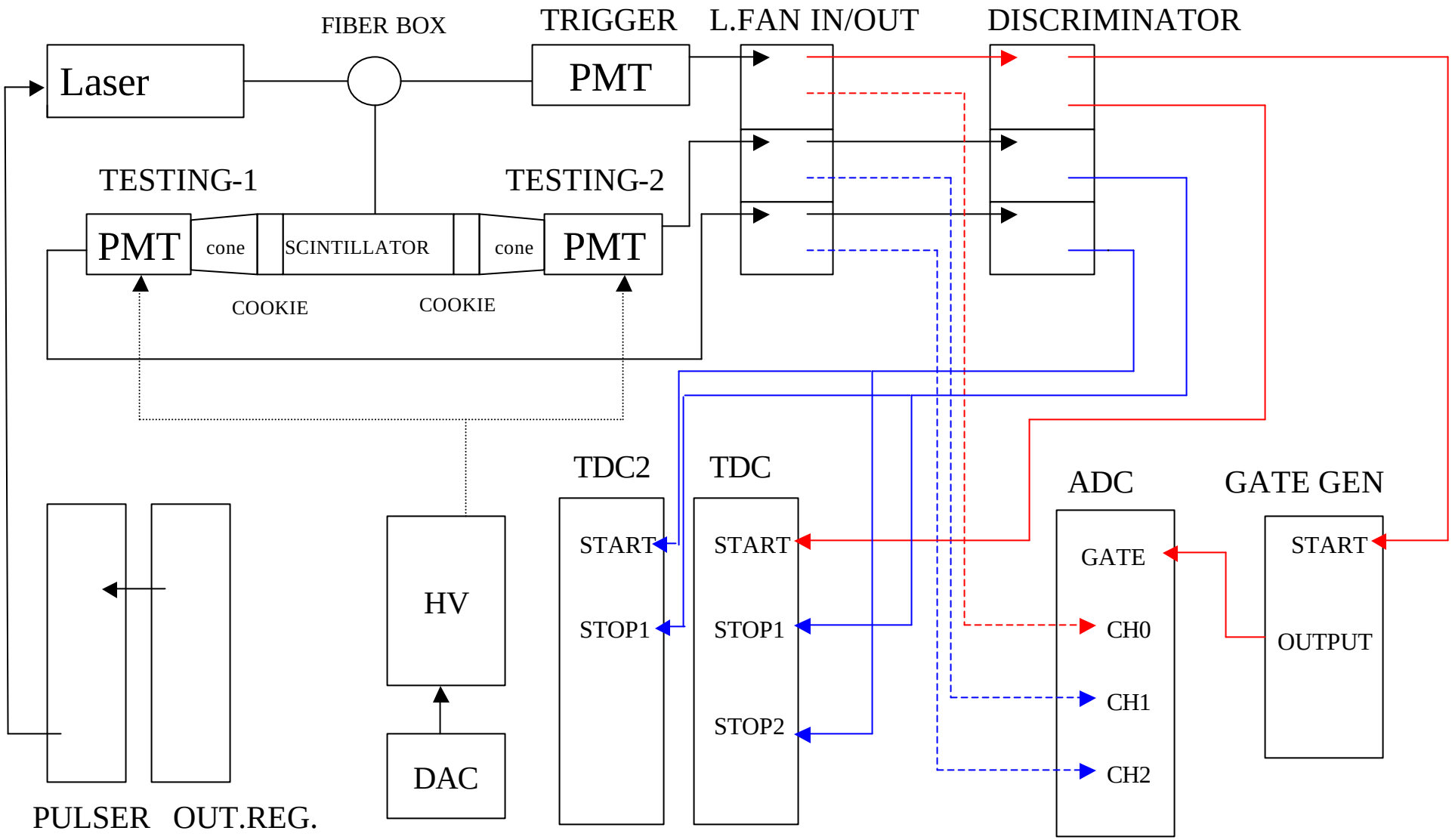

New Database Parameters (to be included)

- Using as criteria the desired PMT gain ($5x10^4$)
  - Working HV @ B=1.4
  - Gain exponent.
  - Timing resolution @ Working HV & B
  - Amplitude vs. Time resolution parameter.
  - Number of photoelectrons @ Working HV & B

Gain Vs HV

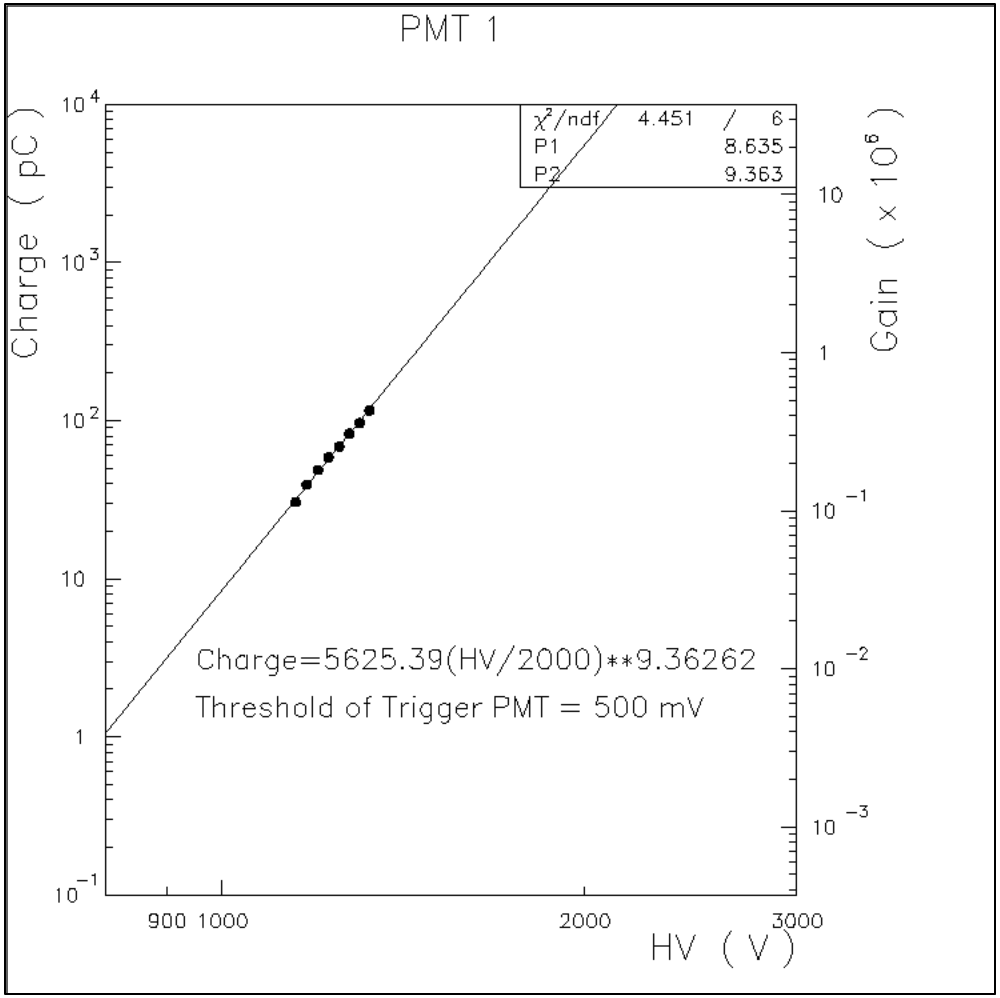
PMT 1
Charge (pC)
Gain (x 10^6)
HV (V)
χ²/ndf 4.451 / 6
P1 8.635
P2 9.363
Charge=5625.39(HV/2000)**9.36262
Threshold of Trigger PMT = 500 mV
900 1000
2000
3000

Gain Vs HV: Gain exponent values

Trigger threshold levels(mV)	Gain Exponent Values
300	9.1662 ± 0.32728
400	11.383 ± 0.30733 ?
500	9.3626 ± 0.26277

Gain vs. HV: Laser beam stability

- Drift and fluctuations of the amount of light introduced by the laser have to be taken into account and ADC readout have to renormalized.

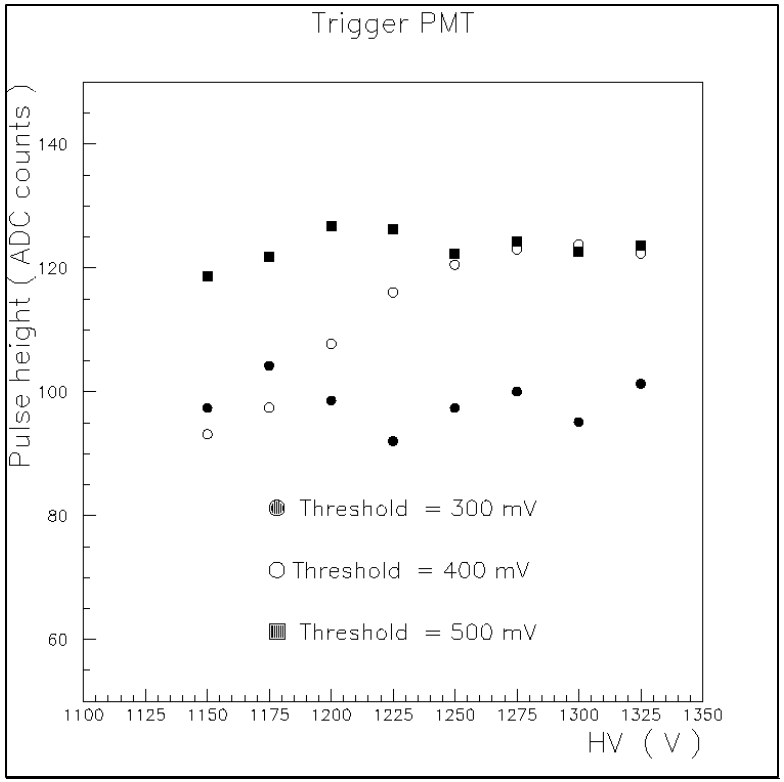

- After correction we get a new value for the gain exponent of 9.019 compatible with the previous measurements.

Timing Resolution vs. Disc. Threshold

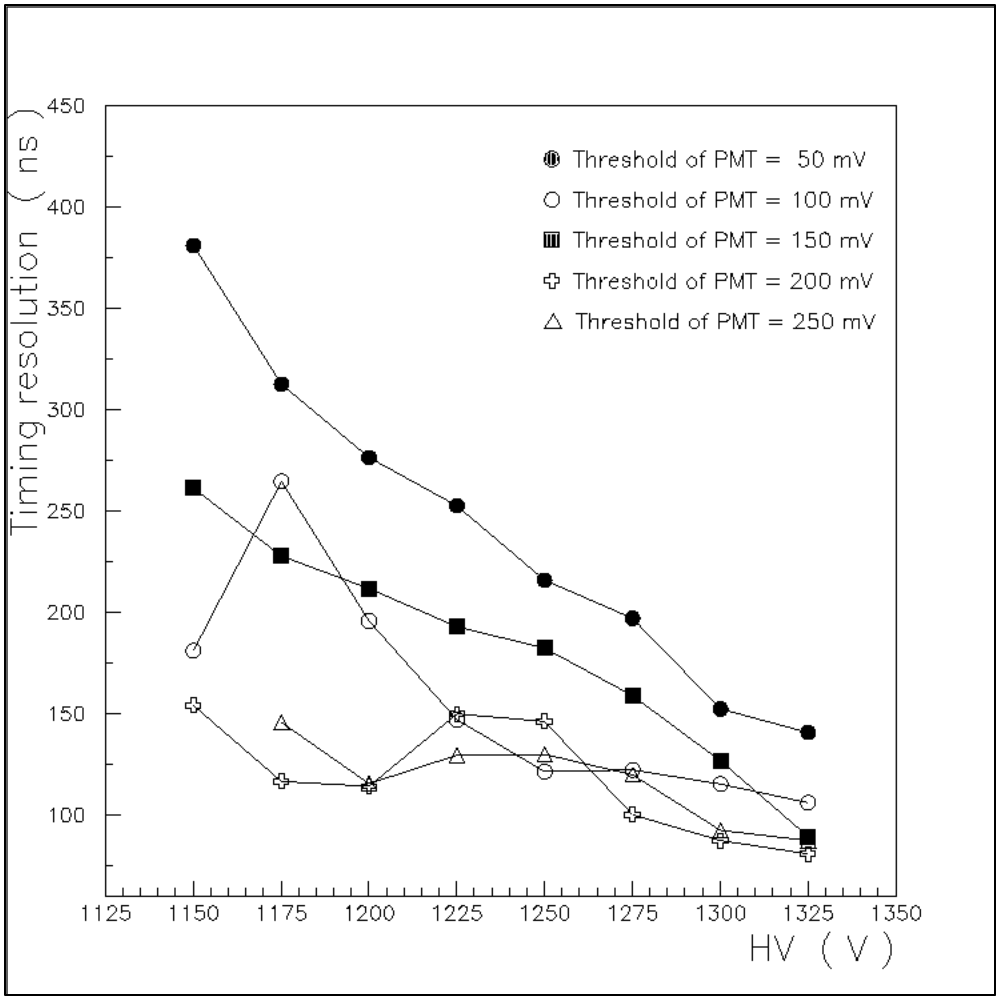

Calibration Steps (time budget)

- For each *pair* of PMTs:
  1. Pmt Assembly (~20 min)
  2. Testing outside magnetic field (~ 10 min/HV point). For 8 scanned points ~ 80 min.
  3. Testing inside magnetic field (~ 10 min/HV point). For 8 scanned points ~ 80 min.)

- The total time per pair is ~ 3 hours.