The Front-Back Asymmetry in Top Pair Production at the Tevatron

Tom Schwarz Dante Amidei Robin Erbacher

UC DAVIS UNIVERSITY OF CALIFORNIA CDF II MICHIGAN

Top Properties At CDF

- With over 2 fb^{-1} of collected data at CDF we now have enough statistics to make VERY meaningful measurements of the properties of the top quark

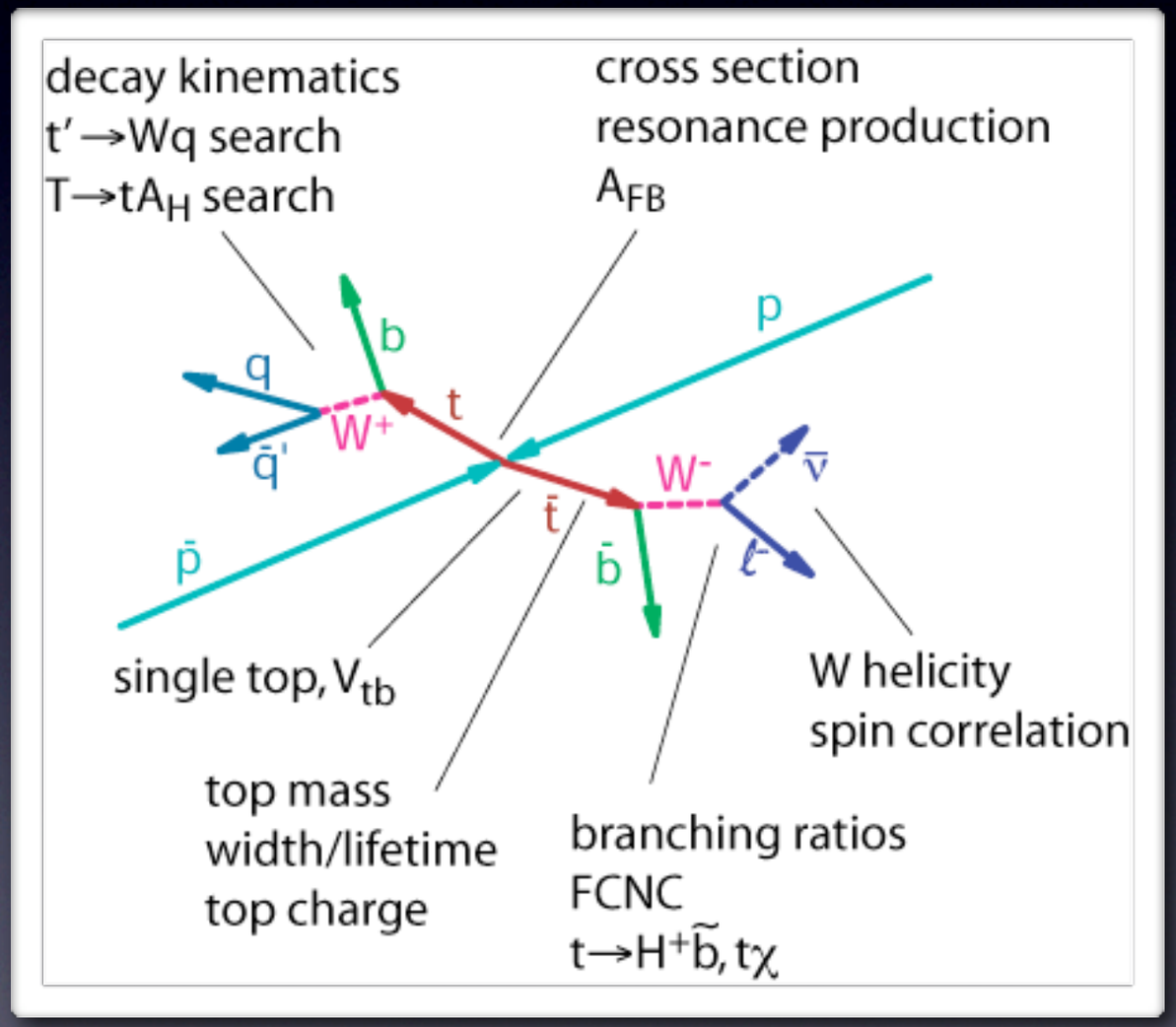

The Front-Back Asymmetry

- Measuring the forward-backward asymmetry in the production of top quarks in the laboratory frame

$$A_{fb} = \frac{N_{Cos\Theta>0} - N_{Cos\Theta<0}}{N_{Cos\Theta>0} + N_{Cos\Theta<0}}$$

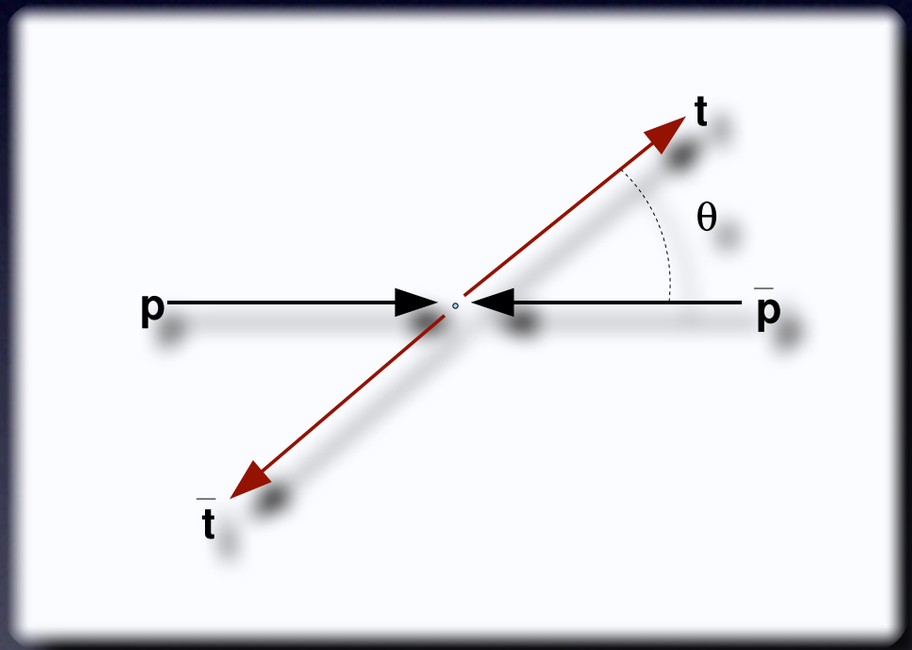

Why Measure It

- Great Test Of The Standard Model
- First measurement of discrete symmetries of the strong interaction at high energy
- Because the LHC is a pp collider (dominated by gg production) this measurement is far more difficult there

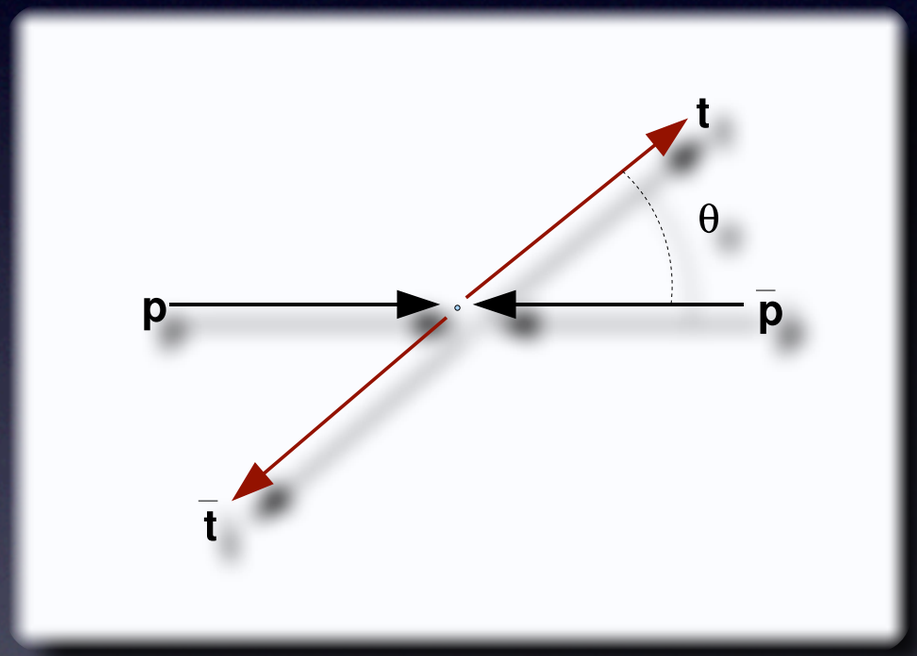

The Tevatron is special for this measurement

Why Measure It

- Interesting Physics predicted by the SM never before tested
- QCD predicts that the interference between LO and NLO diagrams result in an observable asymmetry in top pair production
- Predicted A_{fb} = 4 ±1% in the ppbar frame

Kuhn, Rodrigo Phys Rev Lett. 81,89 (1998)
Frixione, Webber MC@NLO

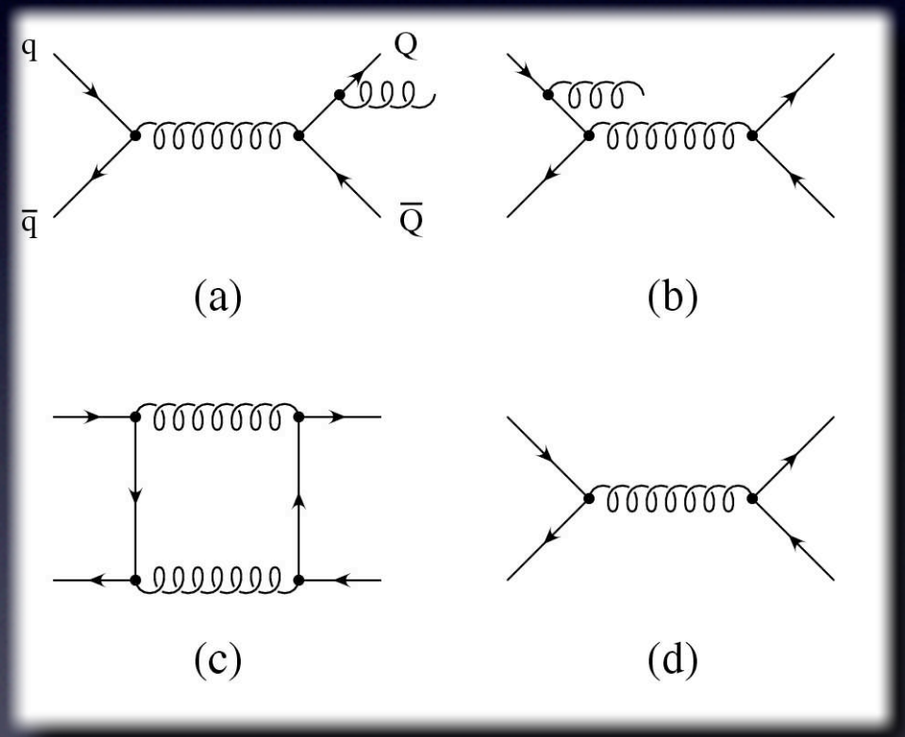

Why Measure It

- Interesting Physics predicted by the SM never before tested
- QCD predicts that the interference between LO and NLO diagrams result in an observable asymmetry in top pair production
- Predicted A_{fb} = 4 ±1% in the ppbar frame

Kuhn, Rodrigo Phys Rev Lett. 81,89 (1998)
Frixione, Webber MC@NLO

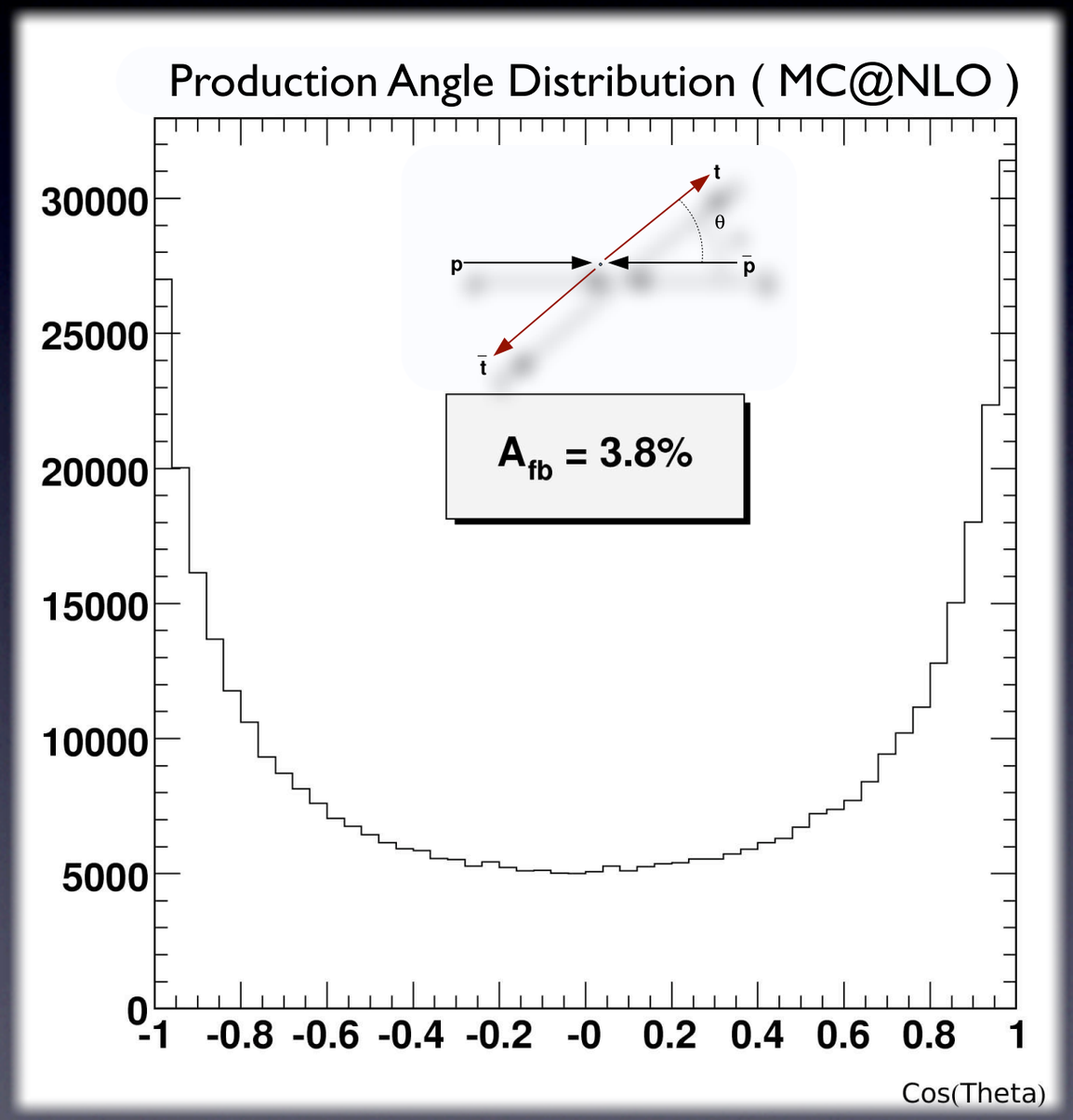

Why Measure It

New physics could manifest itself as an asymmetry in top production

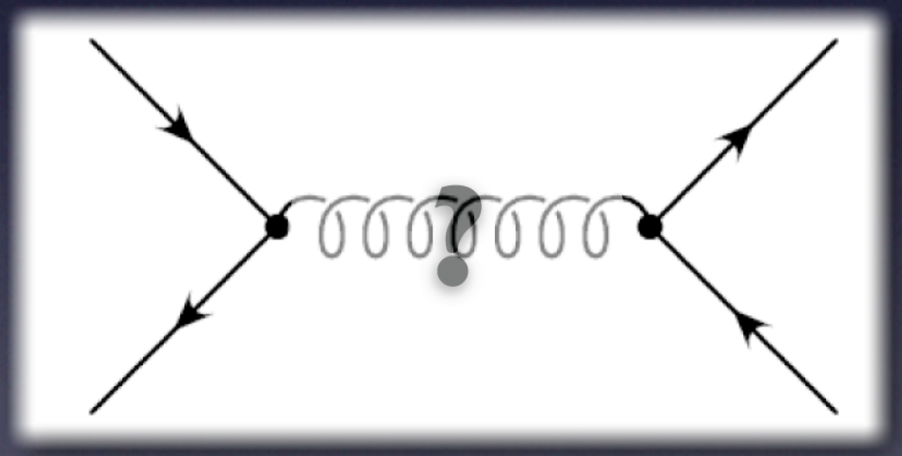

Why Measure It

- Axigluons are colored heavy neutral gauge bosons that couple to quarks through an axial vector current and the same strong coupling as gluons
- Most observable manifestation is in A_{fb} of top production
- Measurement of A_{fb} in 695 pb^{-1} of collected data at CDF used to place limits on axigluon mass

Mass Limit Of An Axigluon

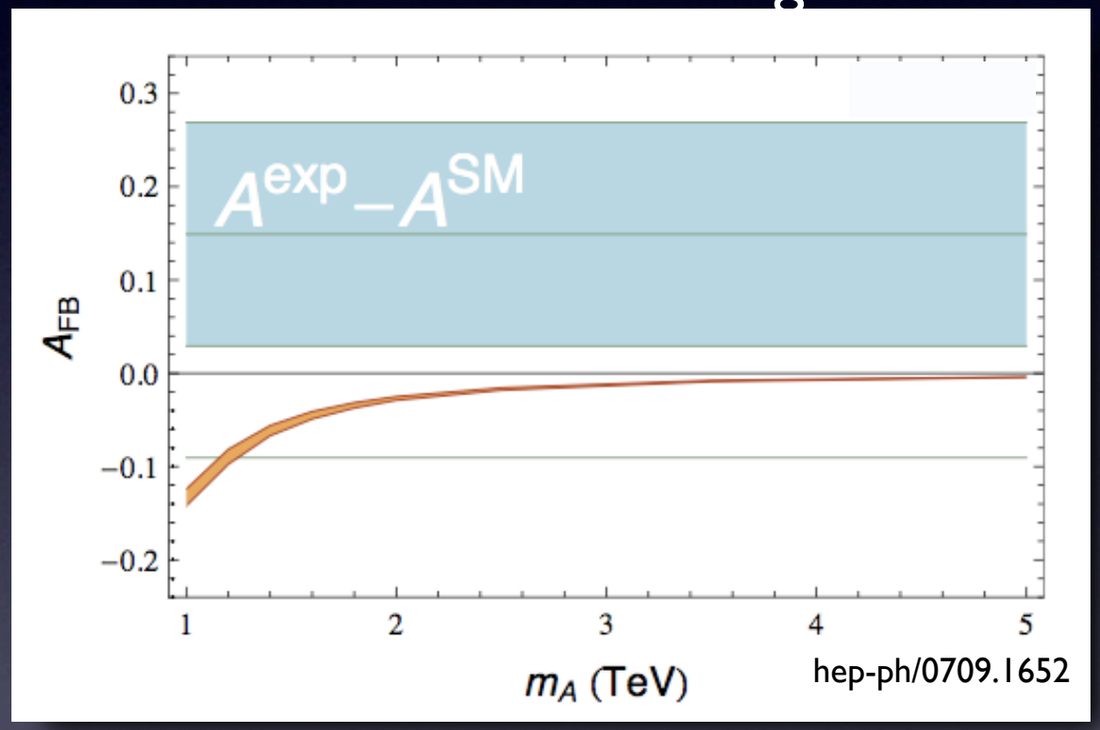

T. A. Schwarz, Ph.D. Thesis, University of Michigan, FERMILAB-THESIS-2006-51, UMI-32- 38081
Antunano, Kuhn, Rodrigo Arxiv hep-ph/0709.1652

Why Measure It

- A gauge boson associated with extending the SM gauge structure (Z`) would produce top pairs asymmetrically

- Given enough events compared to SM strong interaction, this production mechanism would be visible in A_{fb}

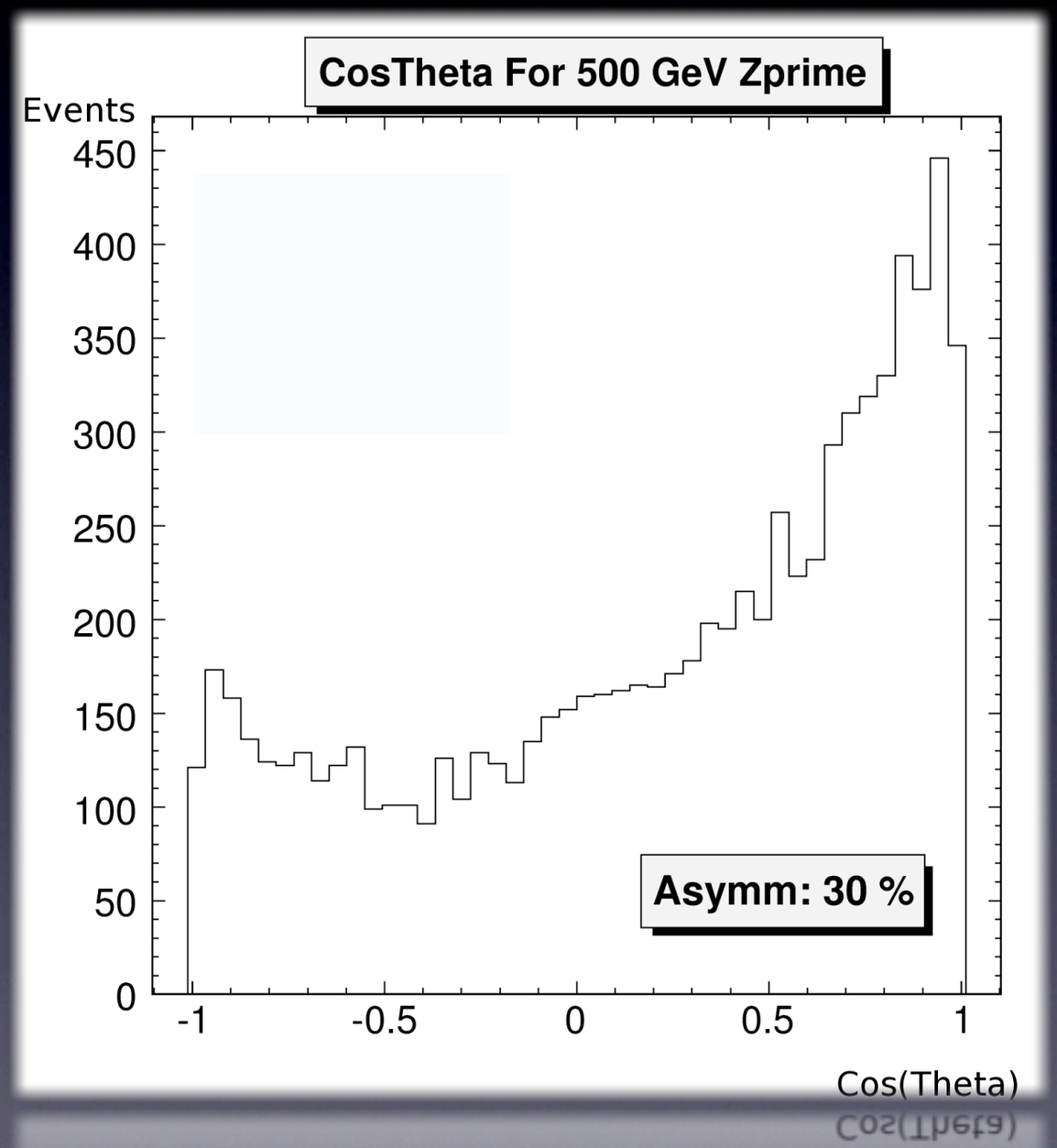

How

- Extract top-antitop events from the data collected at CDF
- Reconstruct the production angle of top in these events
- Correct for any distortion from the detector, background processes, and our method of reconstruction
- Measure A_{fb}

Finding ttbar Events

- At CDF we can detect:
  - Electrons, Muons
  - Photons
  - Jets: Remnants of the fragmentation process of quarks and gluons
  - "Missing" Energy: Large Momentum imbalance in the detector which is evidence of a neutrino

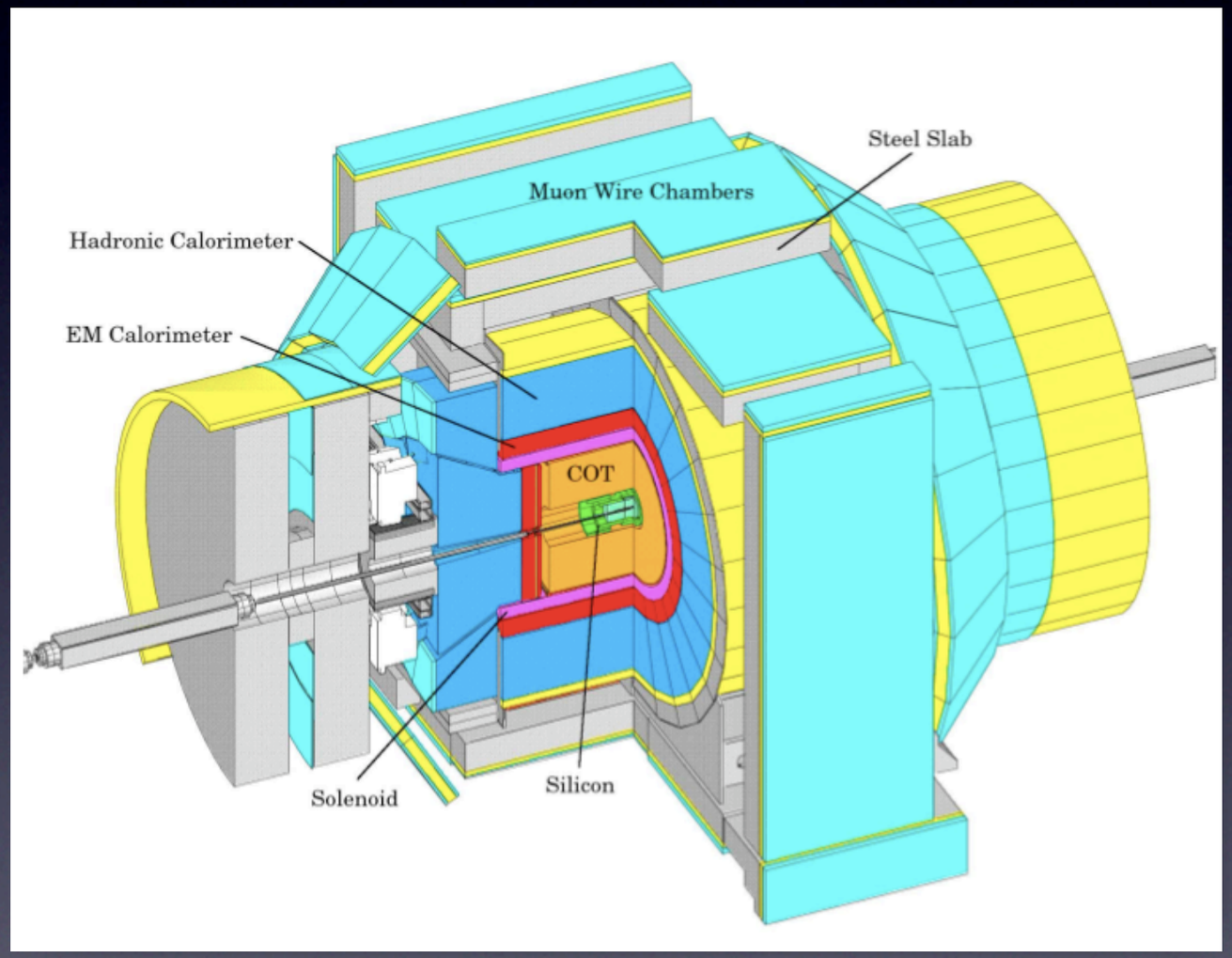

Finding ttbar Events

- Measurement is performed in the lepton plus jets channel
- $\geq$ 4 Jets (Et $\geq$ 20 GeV and $\eta < 2.0$)
- 1 Electron or Muon (Et $\geq$ 20 GeV)
- "Missing" Energy (Et $\geq$ 20 GeV)
- $\geq$1 Bottom "Tagged" Jet

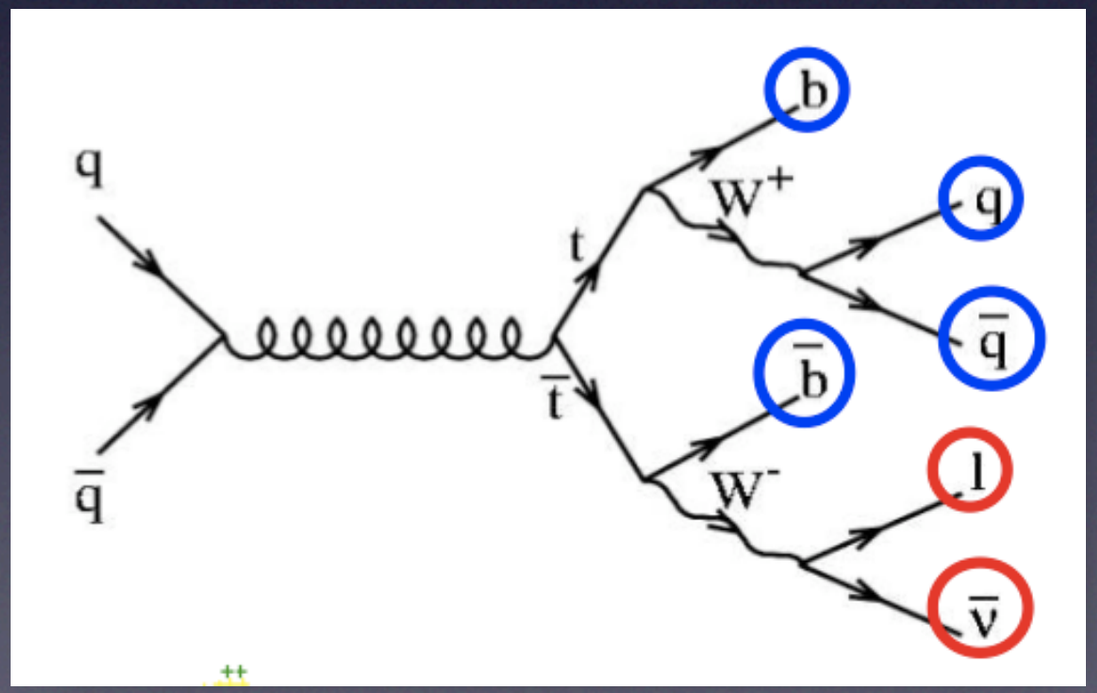

Finding ttbar Events

- Measurement is performed in the lepton plus jets channel
- $\geq$ 4 Jets (Et $\geq$ 20 GeV and $\eta < 2.0$)
- 1 Electron or Muon (Et $\geq$ 20 GeV)
- "Missing" Energy (Et $\geq$ 20 GeV)
- $\geq$1 Bottom "Tagged" Jet

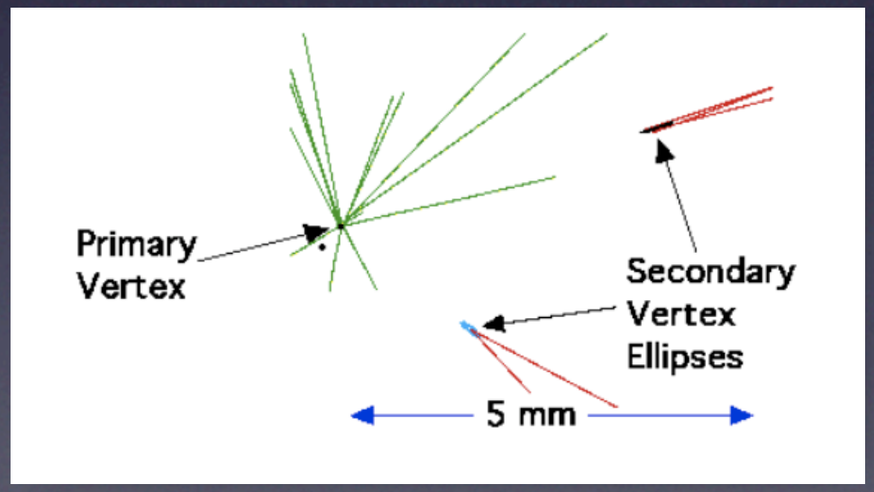

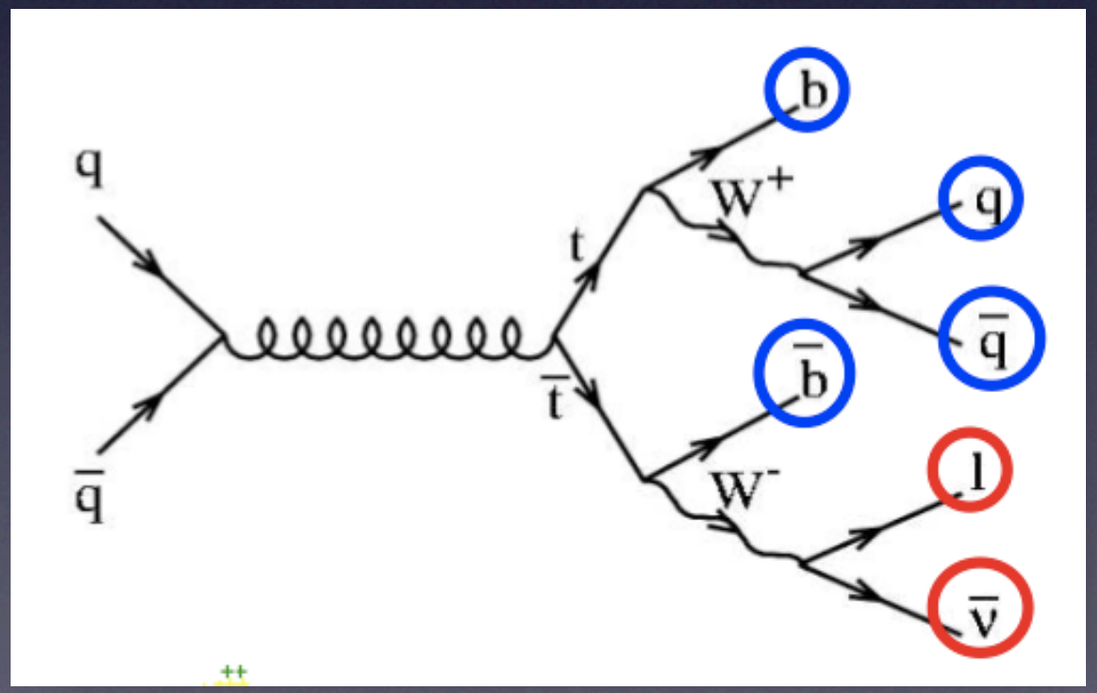

Background Prediction

- For our selection we predict 373 top pairs with a S:B = 4:1 for a Top Mass of 175.0 GeV
- We observe 484 events with a predicted background of 85.7 events

Process	4jets	5jets
WW	2.5 ± 0.3	0.7 ± 0.1
WZ	0.9 ± 0.1	0.2 ± 0.0
ZZ	0.1 ± 0.0	0.0 ± 0.0
Stop S	2.0 ± 0.2	0.4 ± 0.0
Stop T	1.9 ± 0.2	0.3 ± 0.0
Z+Jets	2.4 ± 0.3	0.5 ± 0.1
Wbb	16.5 ± 6.7	3.5 ± 1.5
Wcc/Wc	12.9 ± 5.2	2.6 ± 1.1
Mistags	16.7 ± 3.6	3.3 ± 1.1
Non-W	13.6 ± 11.7	4.6 ± 4.6
$t\bar{t}$ (6.7pb)	252.0 ± 34.9	85.3 ± 11.8
Total Prediction	321.6 ± 39.1	101.4 ± 13.0
Observed	371.0	113.0

CDF Run II Preliminary Lumi=1.9 fb^{-1}

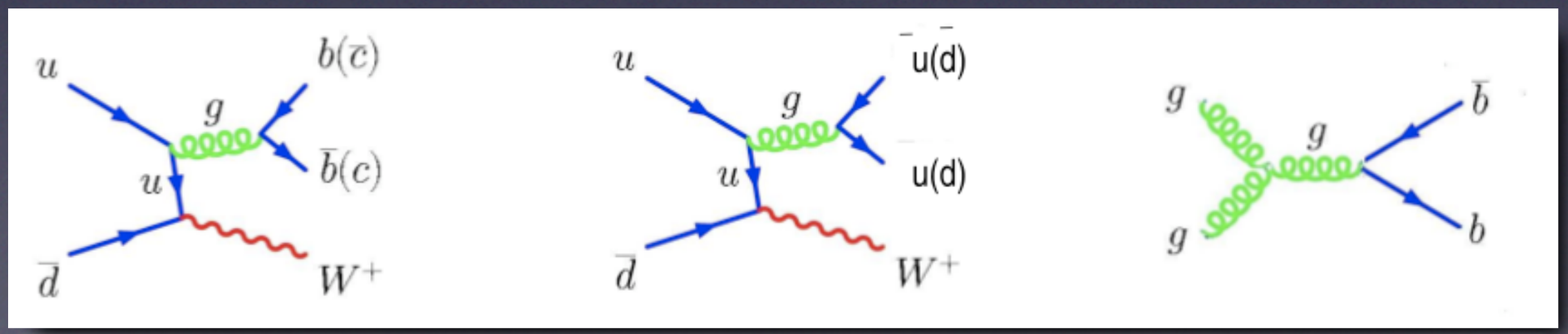

Reconstructing The Event

- We have 4 jets, a lepton, and "Missing" energy
- It is almost impossible to discern the "type" of quark which produced a given jet
- How do we find the top quark production angle from this mess?
- An algorithm is used based on the topology of the event

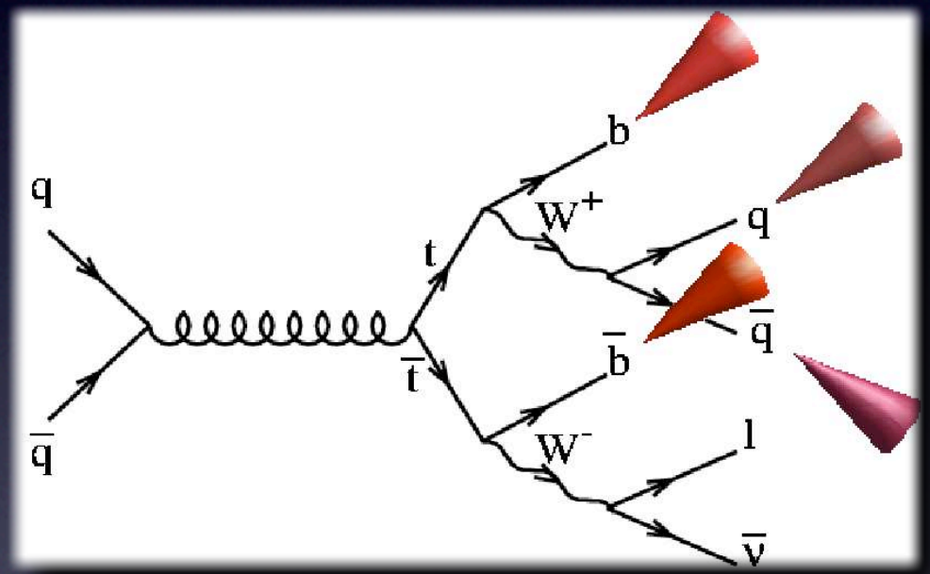

Reconstructing The Event

- 4 jets must be matched to 4 partons
- 24 different combinations to choose from
- Jet and unclustered energies can vary within error
- Known Top Mass can be used as a constraint
- Choose combination with lowest χ^2

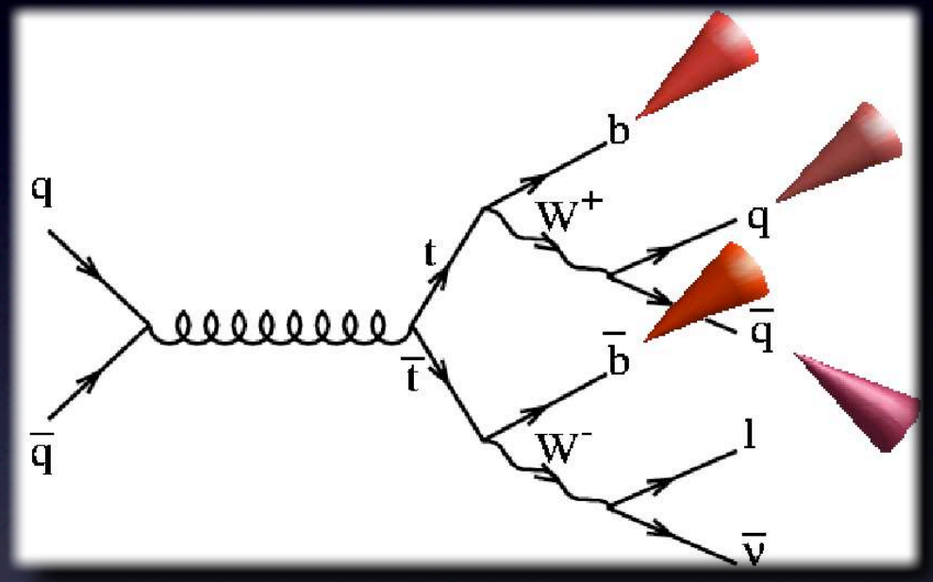

$$\chi^2 = \sum_{i=l,jets} \frac{(p_t^{i,meas} - p_t^{i,fit})^2}{\sigma_i^2} + \sum_{j=x,y} \frac{(p_j^{UE,meas} - p_j^{UE,fit})^2}{\sigma_j^2}$$

$$+ \frac{(M_{jj} - M_W)^2}{\Gamma_W^2} + \frac{(M_{l\nu} - M_W)^2}{\Gamma_W^2} + \frac{(M_{bjj} - M_{fit})^2}{\Gamma_t^2} + \frac{(M_{bl\nu} - M_{fit})^2}{\Gamma_t^2}$$

Reconstructing The Event

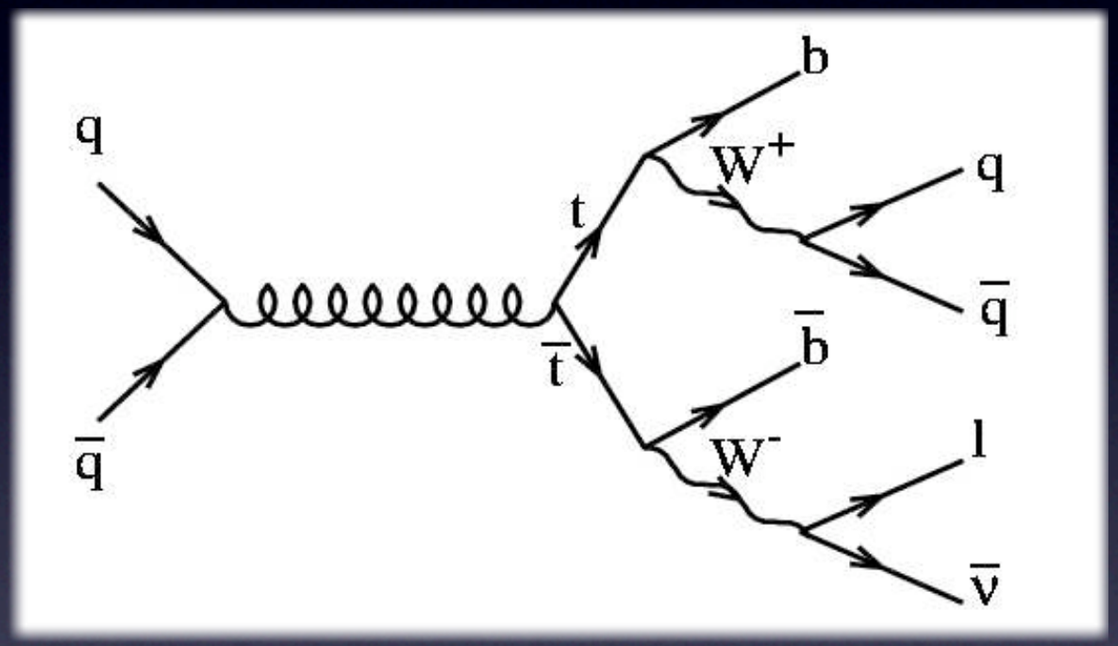

$$\chi^2 = \sum_{i=l,jets} \frac{(p_t^{i,meas} - p_t^{i,fit})^2}{\sigma_i^2} + \sum_{j=x,y} \frac{(p_j^{UE,meas} - p_j^{UE,fit})^2}{\sigma_j^2}$$

$$+ \frac{(M_{jj} - M_W)^2}{\Gamma_W^2} + \frac{(M_{l\nu} - M_W)^2}{\Gamma_W^2} + \frac{(M_{bjj} - M_{fit})^2}{\Gamma_t^2} + \frac{(M_{bl\nu} - M_{fit})^2}{\Gamma_t^2}$$

Reconstructing The Event

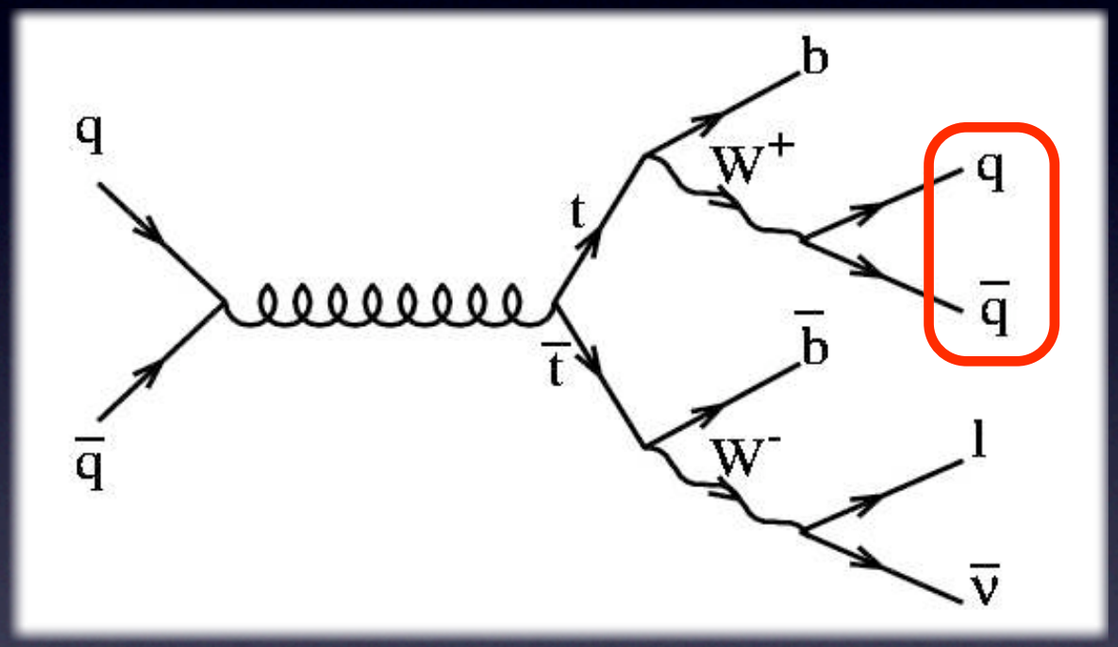

$$\chi^2 = \sum_{i=l,jets} \frac{(p_t^{i,meas} - p_t^{i,fit})^2}{\sigma_i^2} + \sum_{j=x,y} \frac{(p_j^{UE,meas} - p_j^{UE,fit})^2}{\sigma_j^2}$$

$$+ \frac{(M_{jj} - M_W)^2}{\Gamma_W^2} + \frac{(M_{l\nu} - M_W)^2}{\Gamma_W^2} + \frac{(M_{bjj} - M_{fit})^2}{\Gamma_t^2} + \frac{(M_{bl\nu} - M_{fit})^2}{\Gamma_t^2}$$

Reconstructing The Event

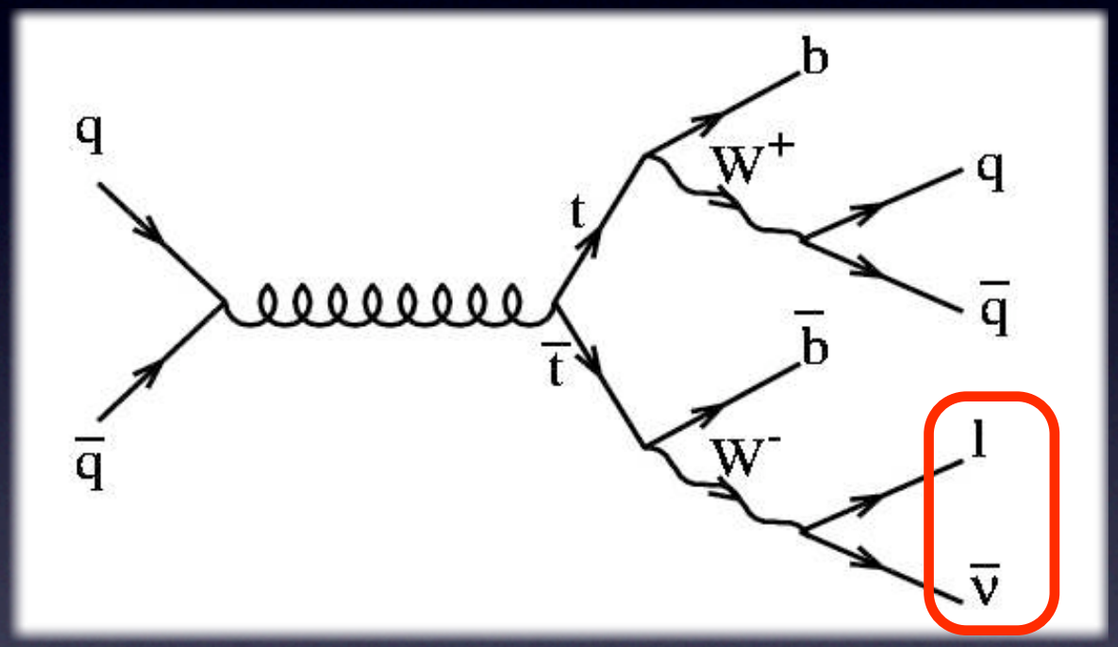

$$\chi^2 = \sum_{i=l,jets} \frac{(p_t^{i,meas} - p_t^{i,fit})^2}{\sigma_i^2} + \sum_{j=x,y} \frac{(p_j^{UE,meas} - p_j^{UE,fit})^2}{\sigma_j^2}$$

$$+ \frac{(M_{jj} - M_W)^2}{\Gamma_W^2} + \frac{(M_{l\nu} - M_W)^2}{\Gamma_W^2} + \frac{(M_{bjj} - M_{fit})^2}{\Gamma_t^2} + \frac{(M_{bl\nu} - M_{fit})^2}{\Gamma_t^2}$$

Reconstructing The Event

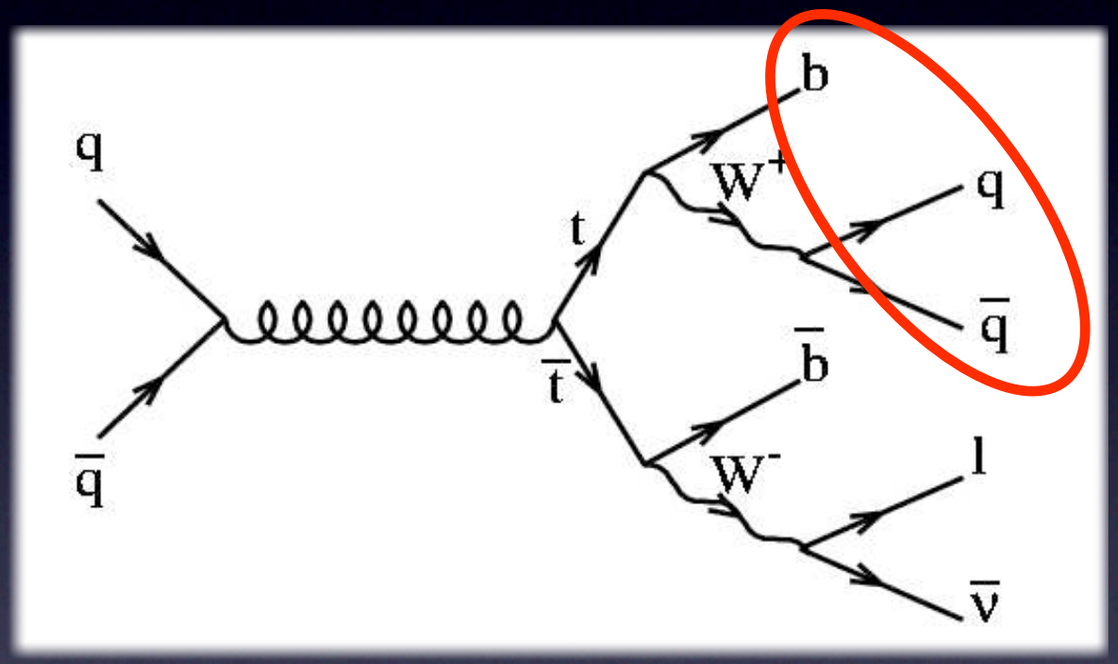

$$\chi^2 = \sum_{i=l,jets} \frac{(p_t^{i,meas} - p_t^{i,fit})^2}{\sigma_i^2} + \sum_{j=x,y} \frac{(p_j^{UE,meas} - p_j^{UE,fit})^2}{\sigma_j^2}$$

$$+ \frac{(M_{jj} - M_W)^2}{\Gamma_W^2} + \frac{(M_{l\nu} - M_W)^2}{\Gamma_W^2} + \boxed{\frac{(M_{bjj} - M_{fit})^2}{\Gamma_t^2}} + \frac{(M_{bl\nu} - M_{fit})^2}{\Gamma_t^2}$$

Reconstructing The Event

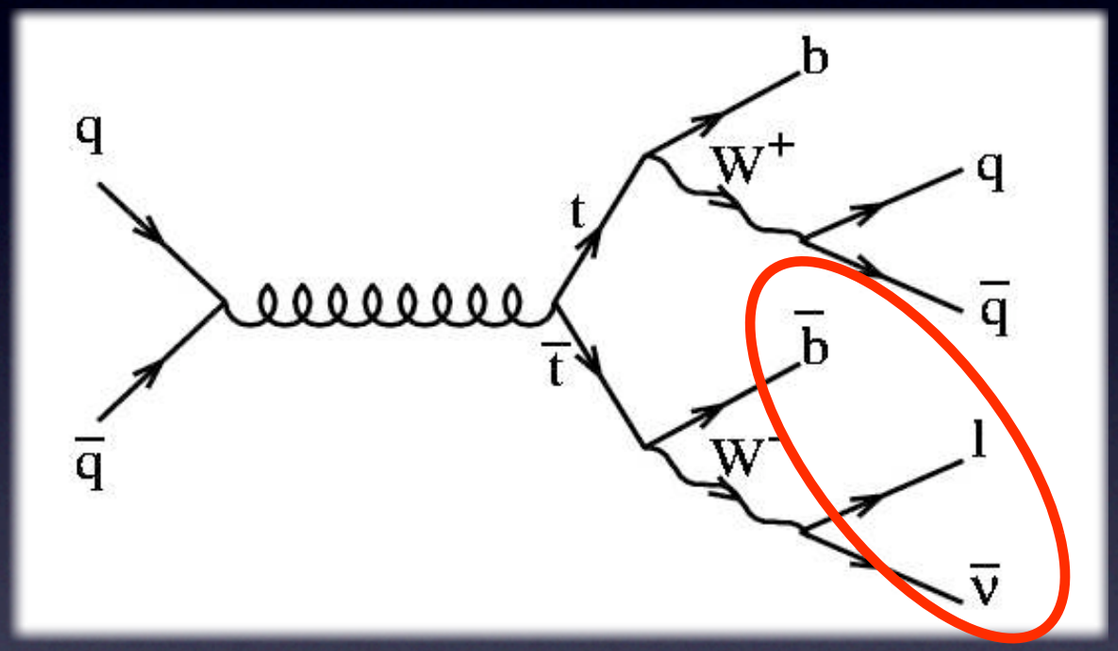

$$\chi^2 = \sum_{i=l,jets} \frac{(p_t^{i,meas} - p_t^{i,fit})^2}{\sigma_i^2} + \sum_{j=x,y} \frac{(p_j^{UE,meas} - p_j^{UE,fit})^2}{\sigma_j^2}$$

$$+ \frac{(M_{jj} - M_W)^2}{\Gamma_W^2} + \frac{(M_{l\nu} - M_W)^2}{\Gamma_W^2} + \frac{(M_{bjj} - M_{fit})^2}{\Gamma_t^2} + \boxed{\frac{(M_{bl\nu} - M_{fit})^2}{\Gamma_t^2}}$$

Reconstructing The Event

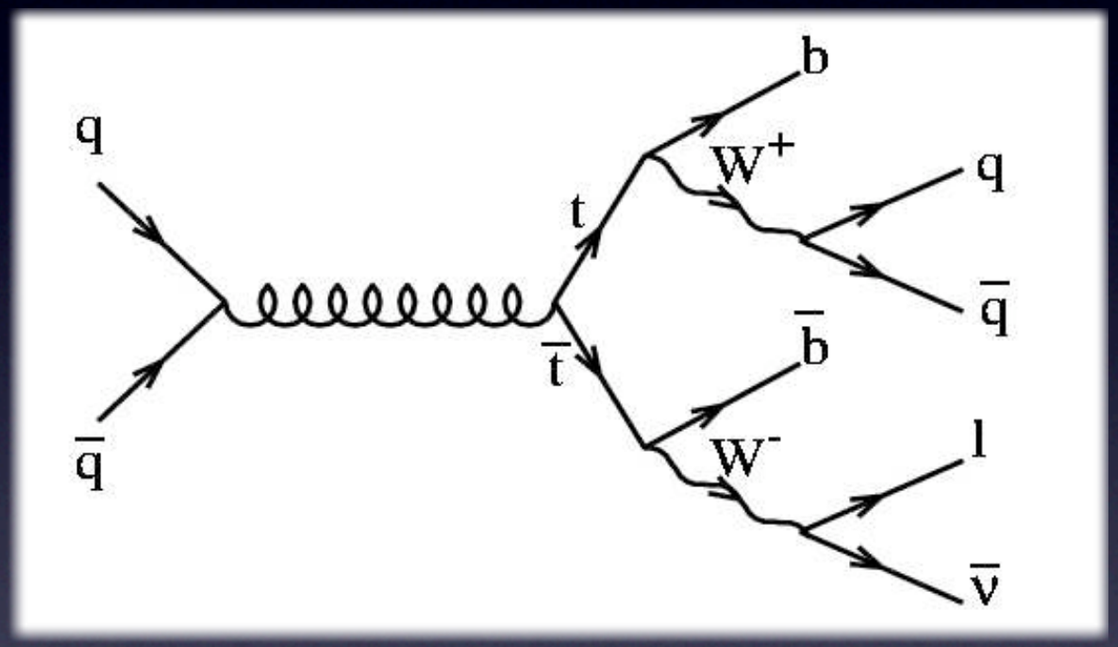

The algorithm reconstructs the entire event:
All particle energies and angles are available after reconstruction

Reconstructed Top Mass

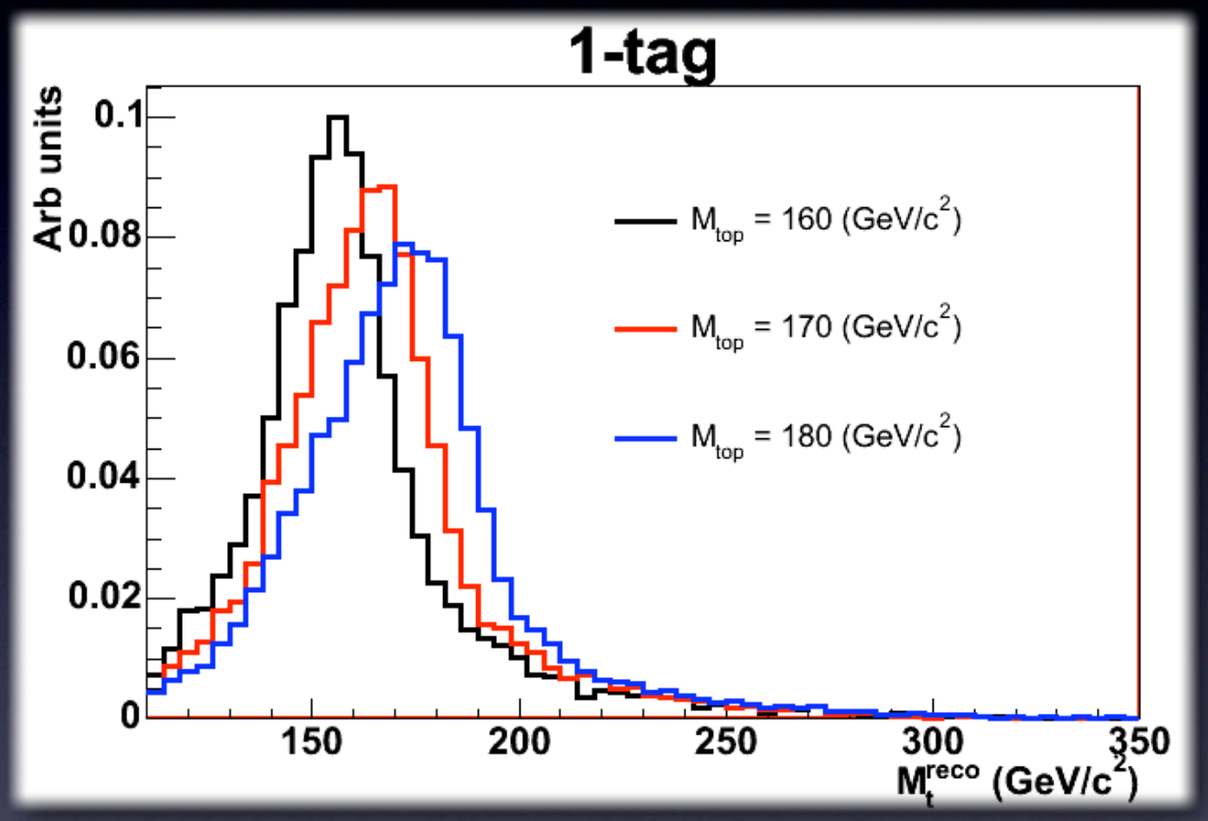

- The algorithm is currently used in one of CDF's flagship Top Mass measurements and is used in over a dozen analyses
- Current implementation was developed here at Michigan
  - *Schwarz, Amidei, Miller*

Reconstructing The Event

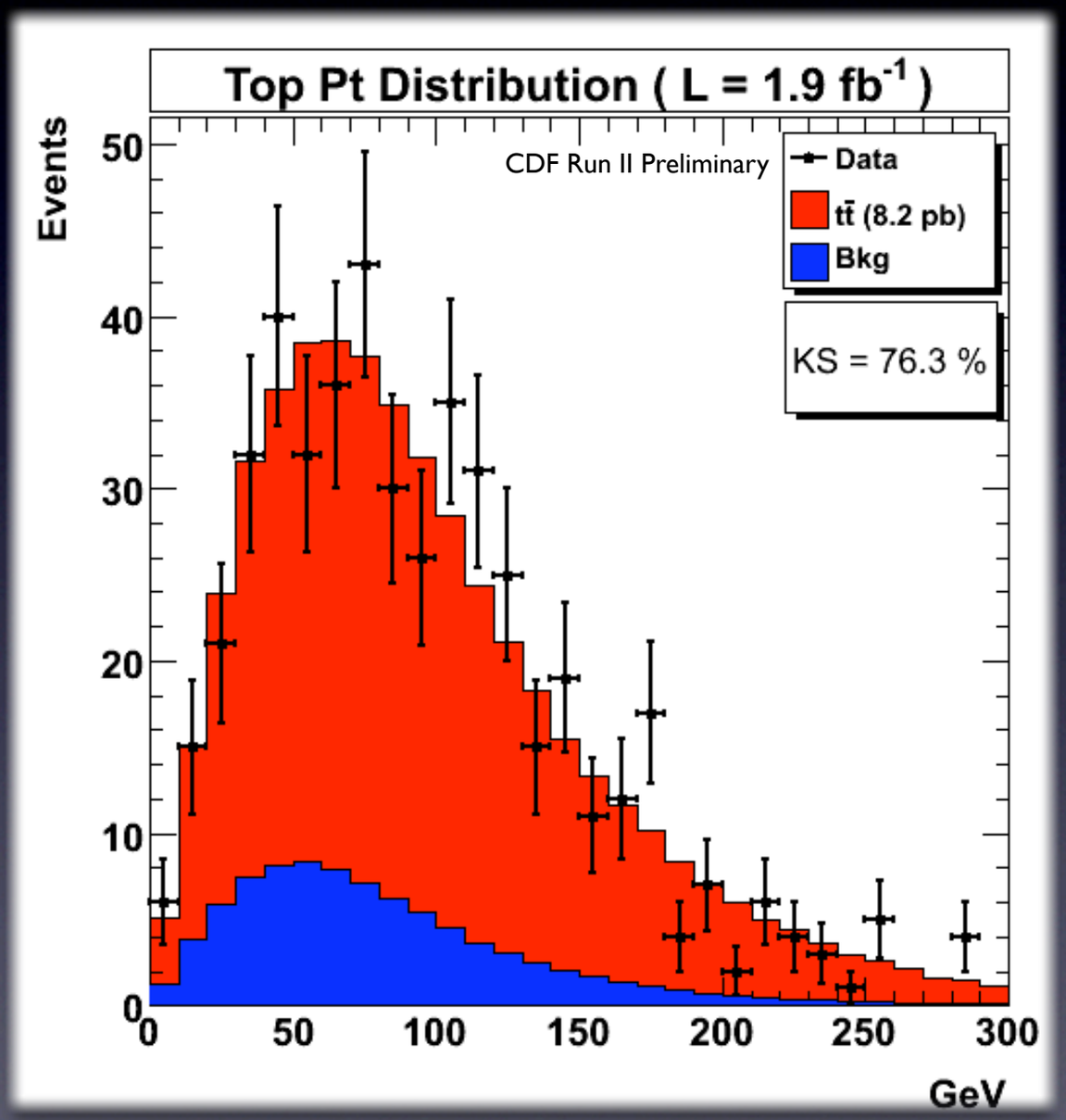

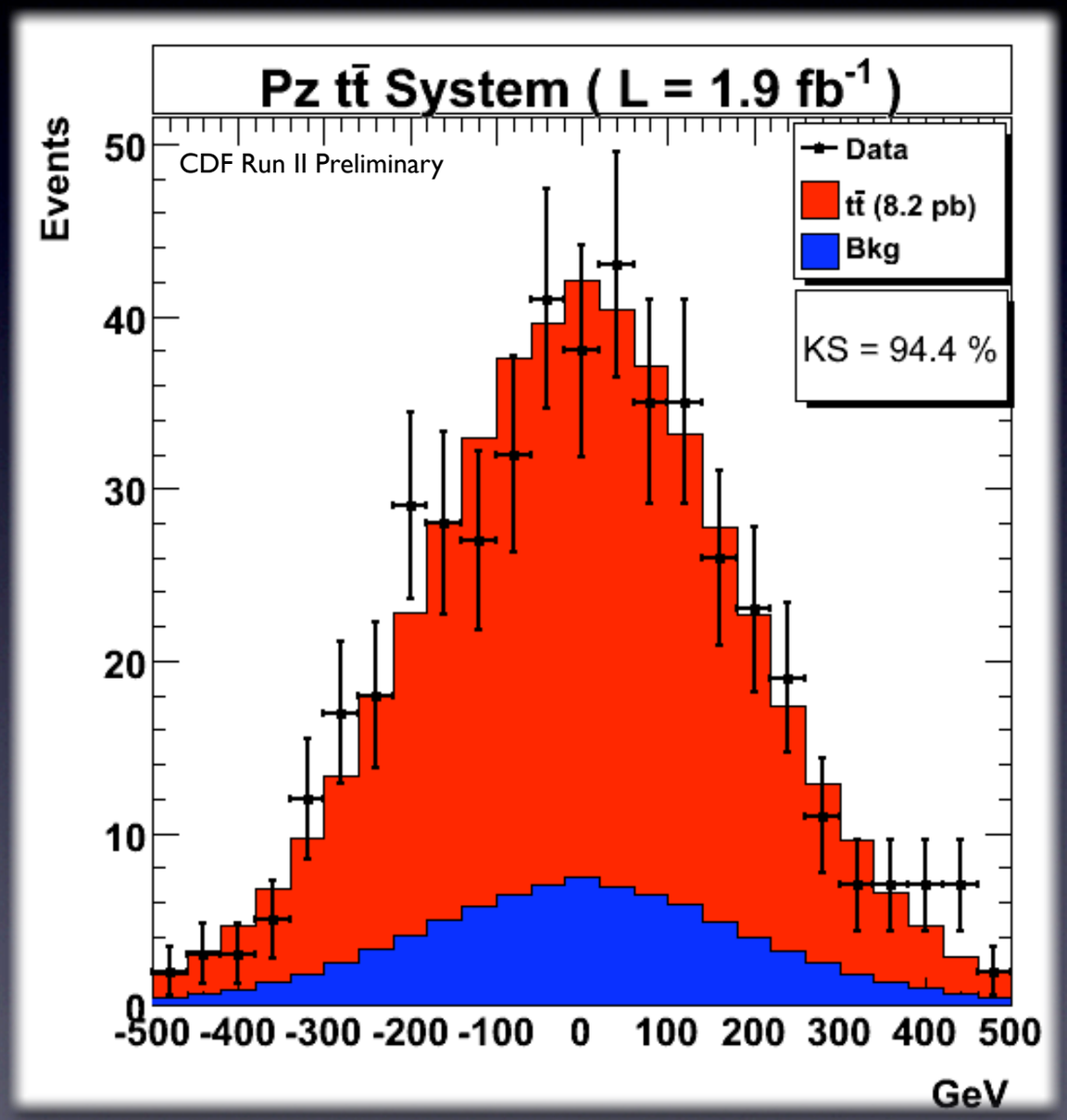

Reconstructing The Production Angle

- Because the entire top-antitop system is reconstructed, there are a few different ways to measure the production angle

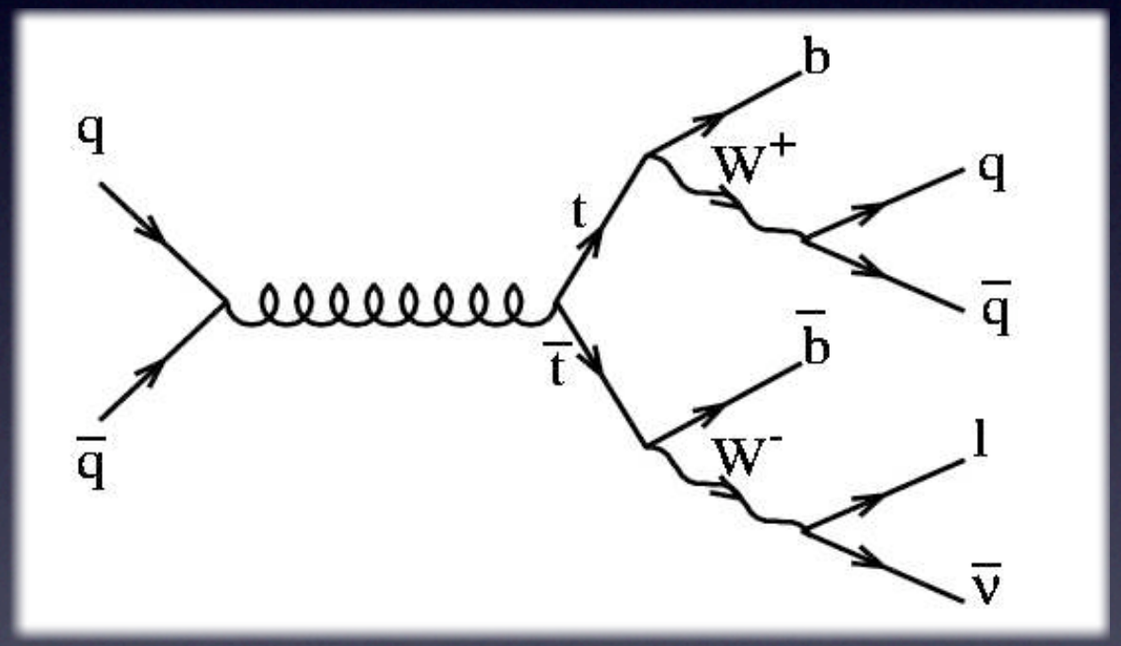

Reconstructing The Production Angle

- Just measure the production angle of the + charged top, regardless of how it decays

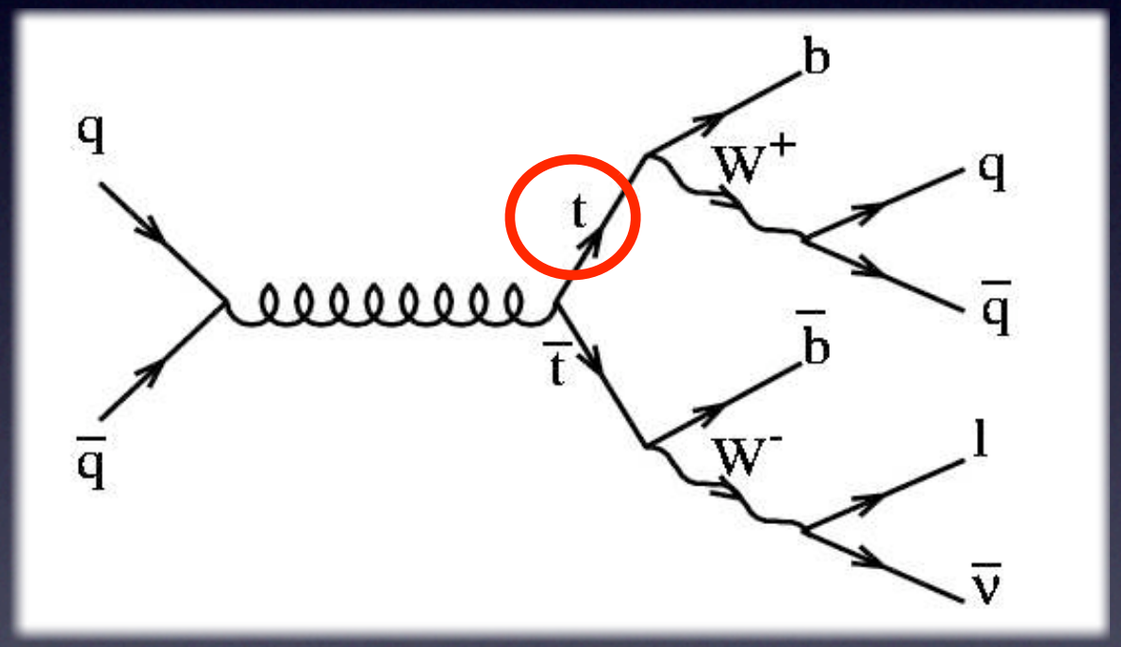

Reconstructing The Production Angle

- If we assume CP is a "good" symmetry in the strong interaction then we can also use ONLY the leptonic or hadronic decaying top and measure A_{fb} through the production angle:

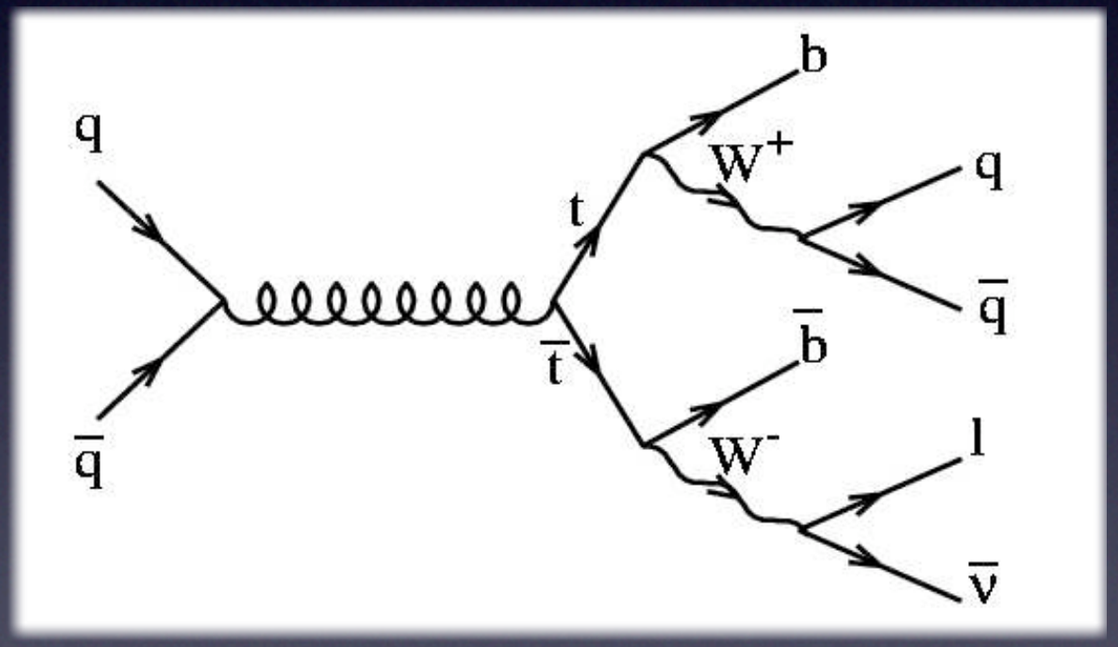

Reconstructing The Production Angle

- If we assume CP is a "good" symmetry in the strong interaction then we can also use ONLY the leptonic or hadronic decaying top and measure A_{fb} through the production angle:
  - $Q_{lepton} \cdot \cos\Theta$ for the leptonic decaying side

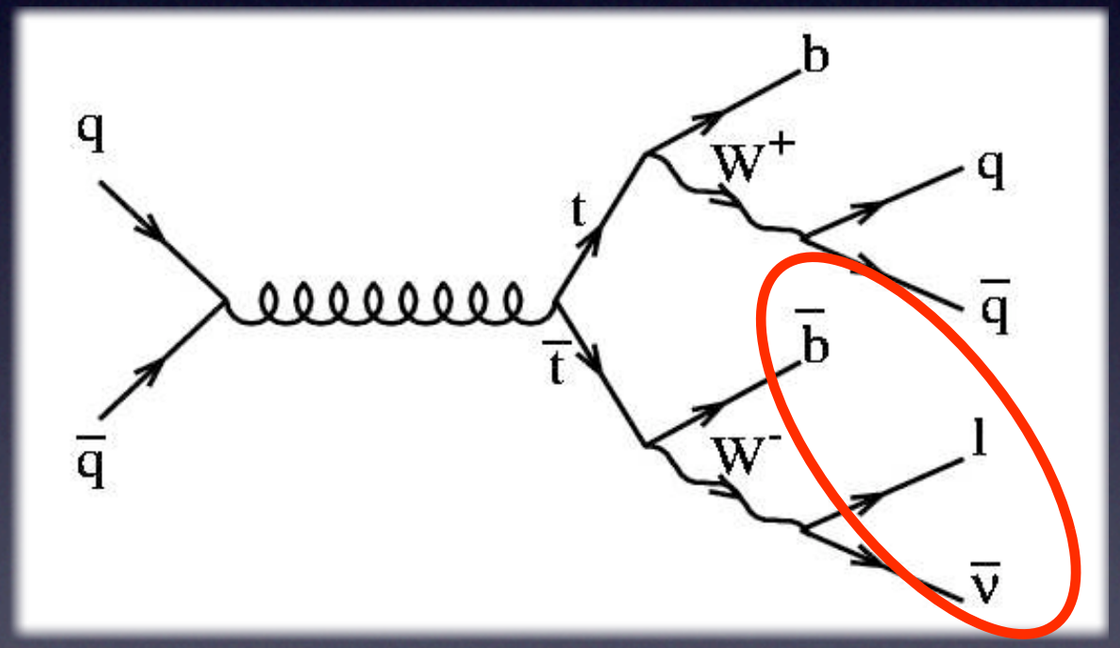

Reconstructing The Production Angle

- If we assume CP is a "good" symmetry in the strong interaction then we can also use ONLY the leptonic or hadronic decaying top and measure A_{fb} through the production angle:
  - $Q_{lepton} \cdot \cos\Theta$ for the leptonic decaying side
  - $-Q_{lepton} \cdot \cos\Theta$ for the hadronic decaying side

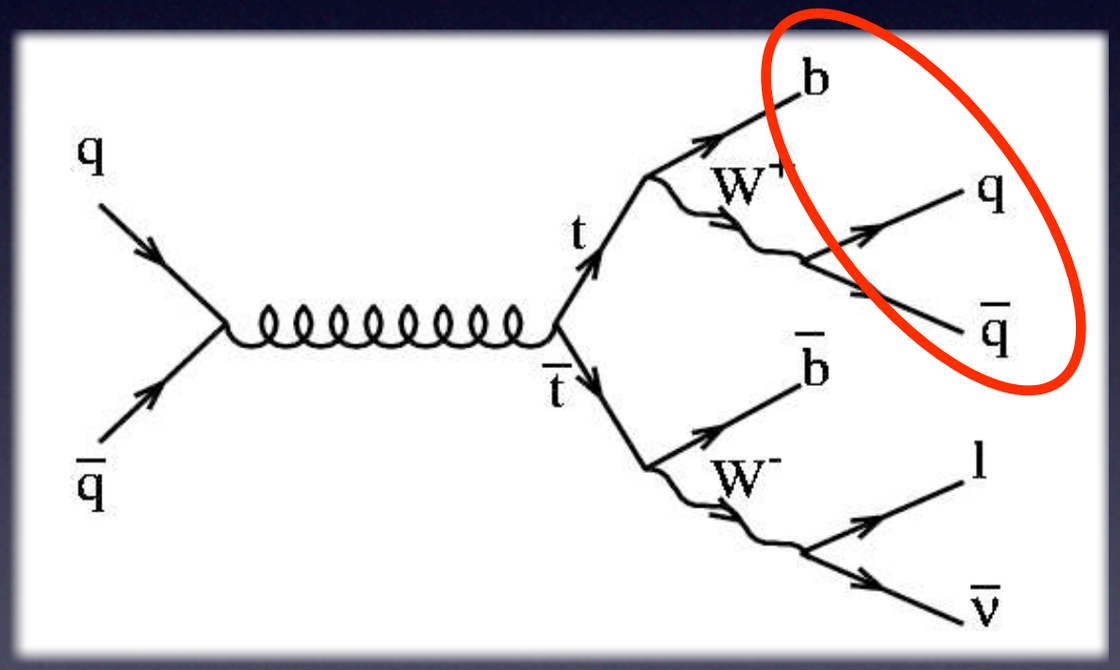

Reconstructing The Production Angle

- If we assume CP is a "good" symmetry in the strong interaction then we can also use ONLY the leptonic or hadronic decaying top and measure A_{fb} through the production angle:
  - $Q_{lepton} \cdot \cos\Theta$ for the leptonic decaying side
  - $-Q_{lepton} \cdot \cos\Theta$ for the hadronic decaying side

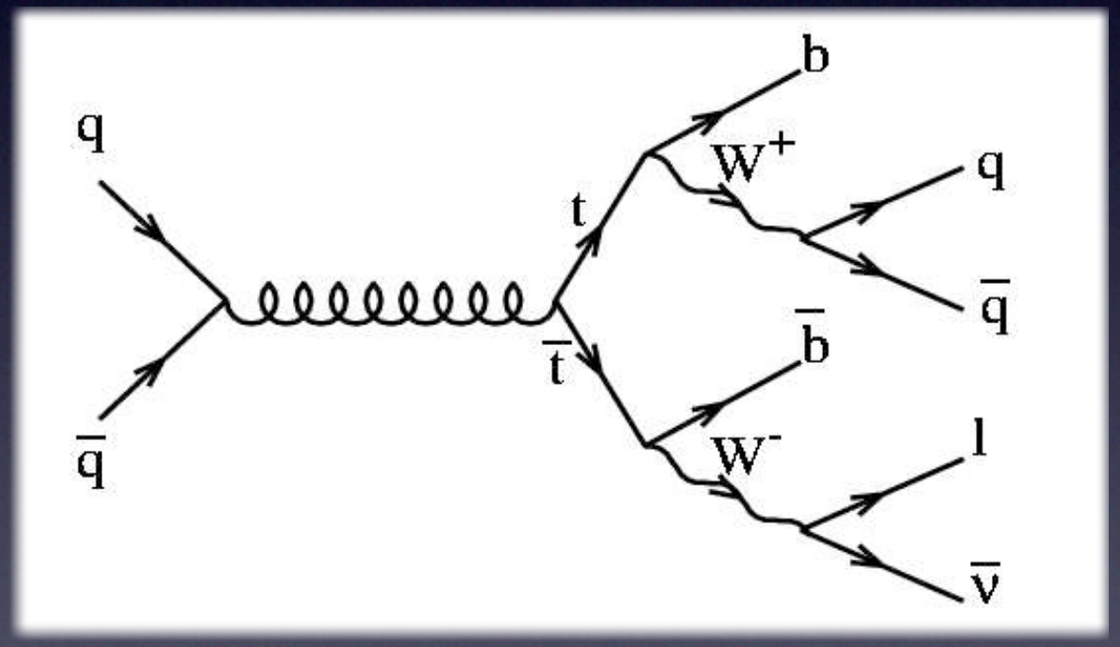

Our choice should depend on the resolution of the reconstructed angle

Reconstructing The Production Angle

- Study this by comparing the "reconstructed" production angle in Monte Carlo to the "true" production angle for the leptonic and hadronic decaying sides

- $\Delta \cos \Theta = \cos \Theta_{true} - \cos \Theta_{recon}$

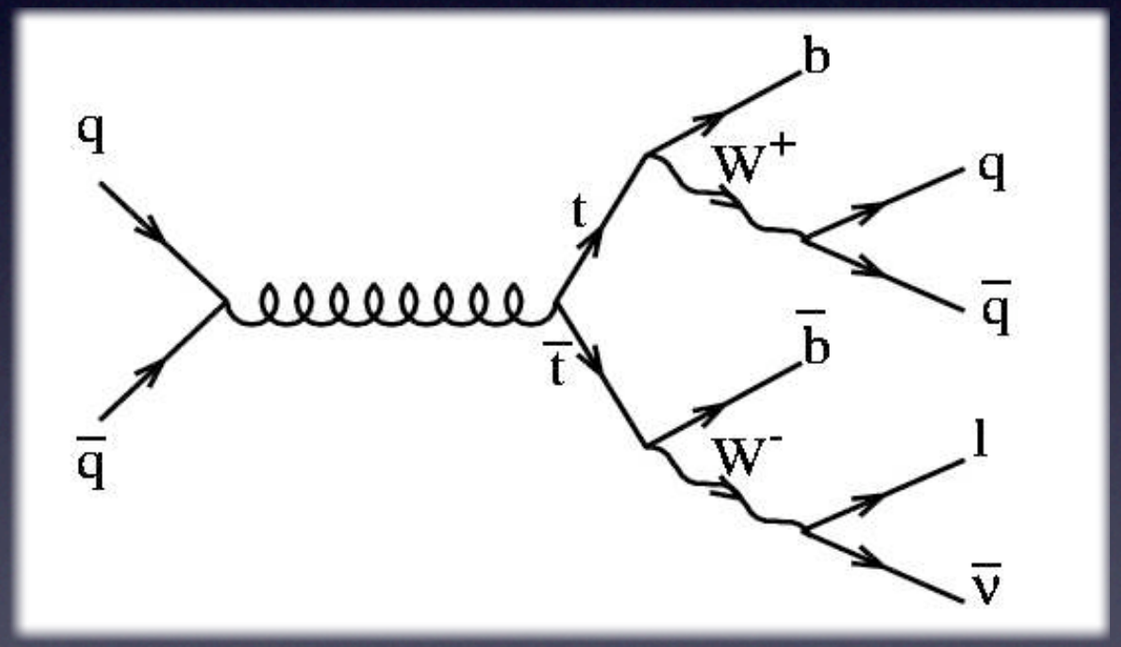

Our choice should depend on the resolution of the reconstructed angle

Reconstructing The Production Angle

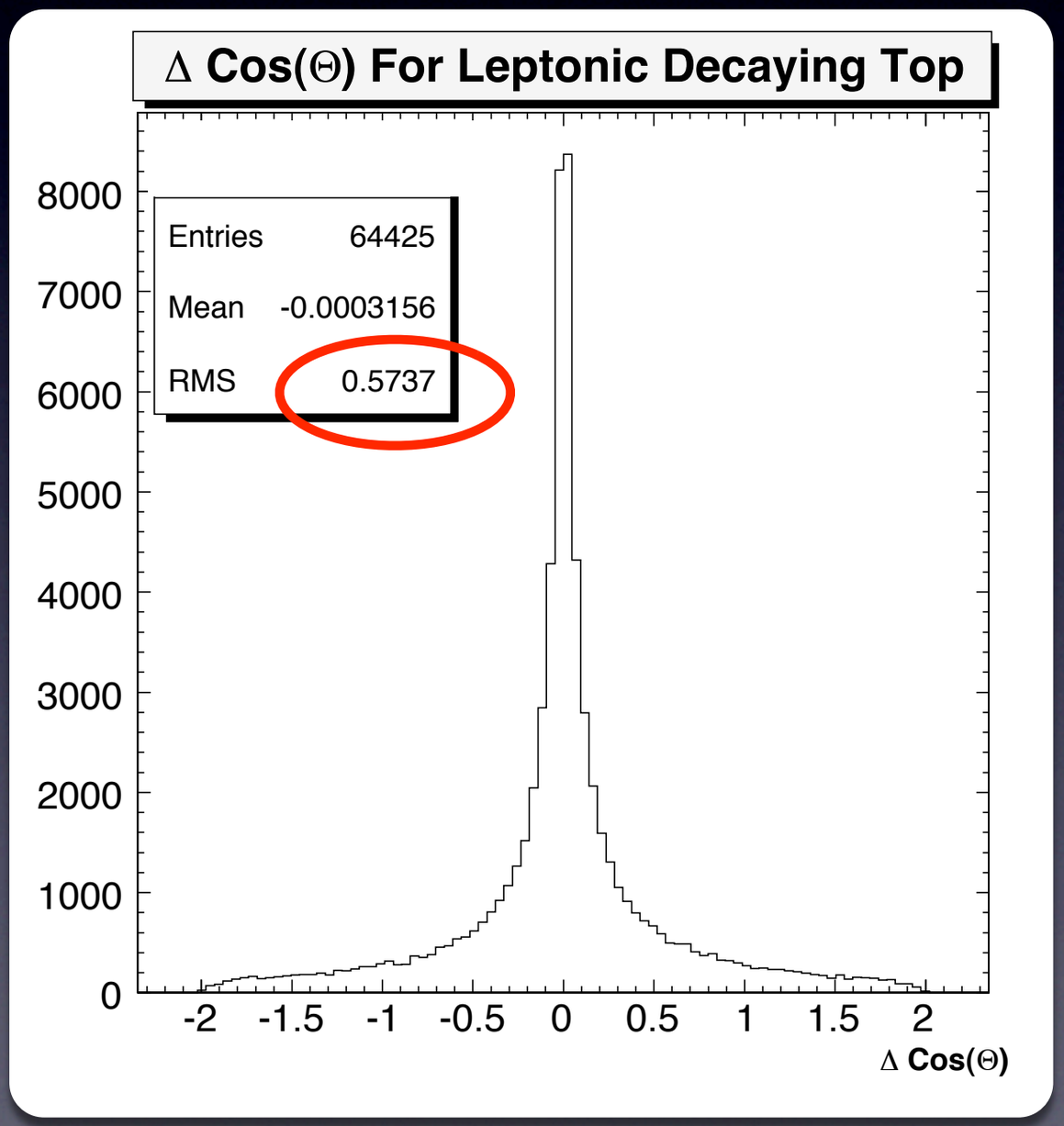

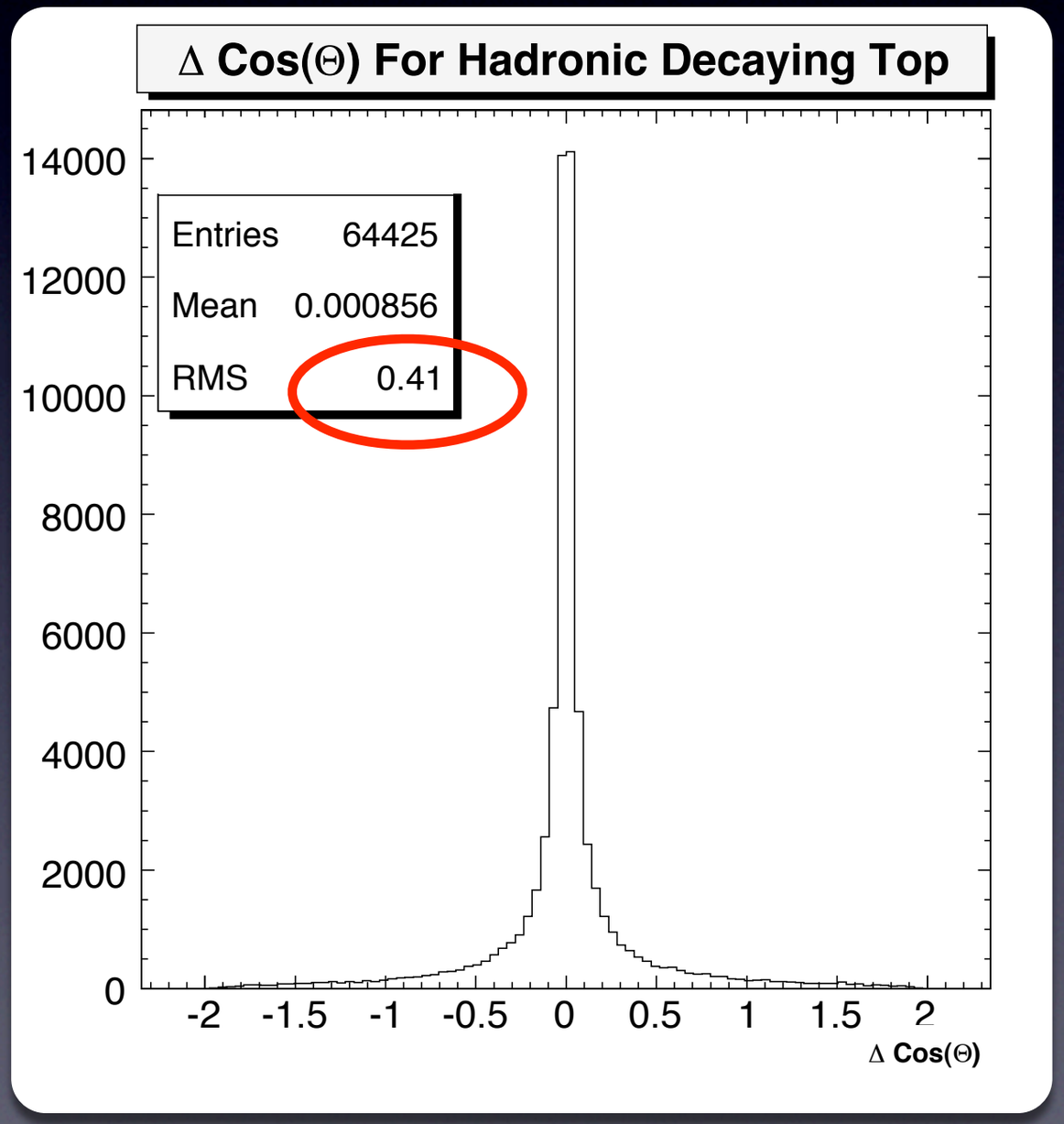

Reconstructing The Production Angle

- If we assume CP is a "good" symmetry in the strong interaction then we can also use ONLY the leptonic or hadronic decaying top and measure A_{fb} through the production angle:
  - $Q_{lepton} \cdot \cos\Theta$ for the leptonic decaying side
  - $-Q_{lepton} \cdot \cos\Theta$ for the hadronic decaying side

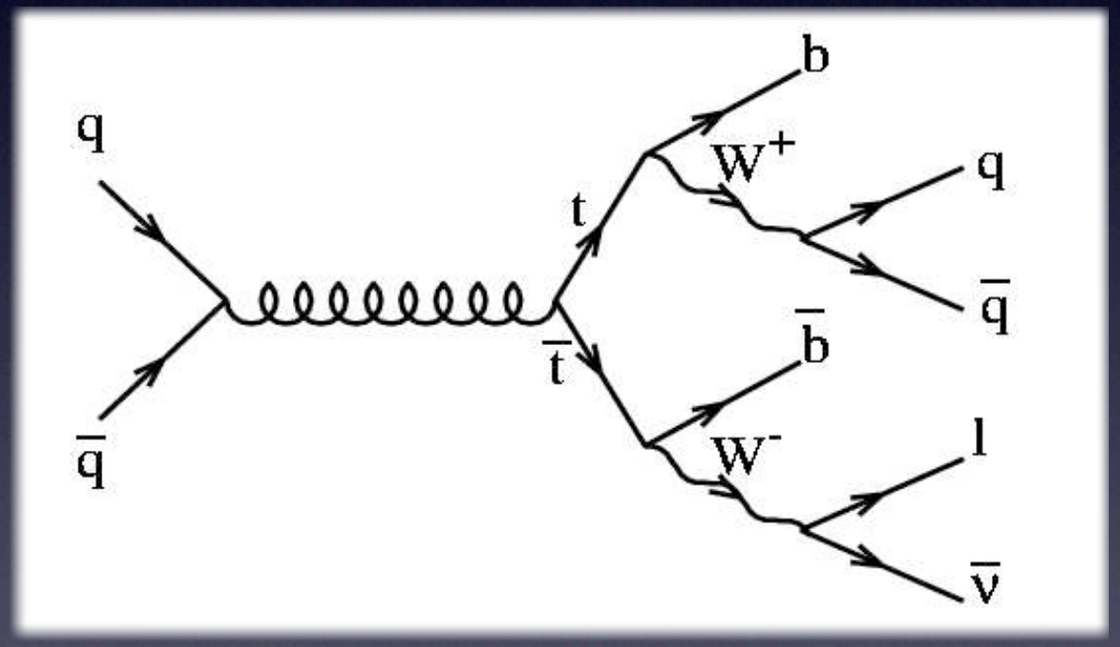

Our choice should depend on the resolution of the reconstructed angle

Production Angle

- This is the production angle distribution for data, signal, and backgrounds coming out of reconstruction
- The shape in data can be biased and/or diluted by backgrounds, acceptance effects, and poor event reconstruction
- Each effect has to be effectively corrected for to get back to a prediction comparable to theory

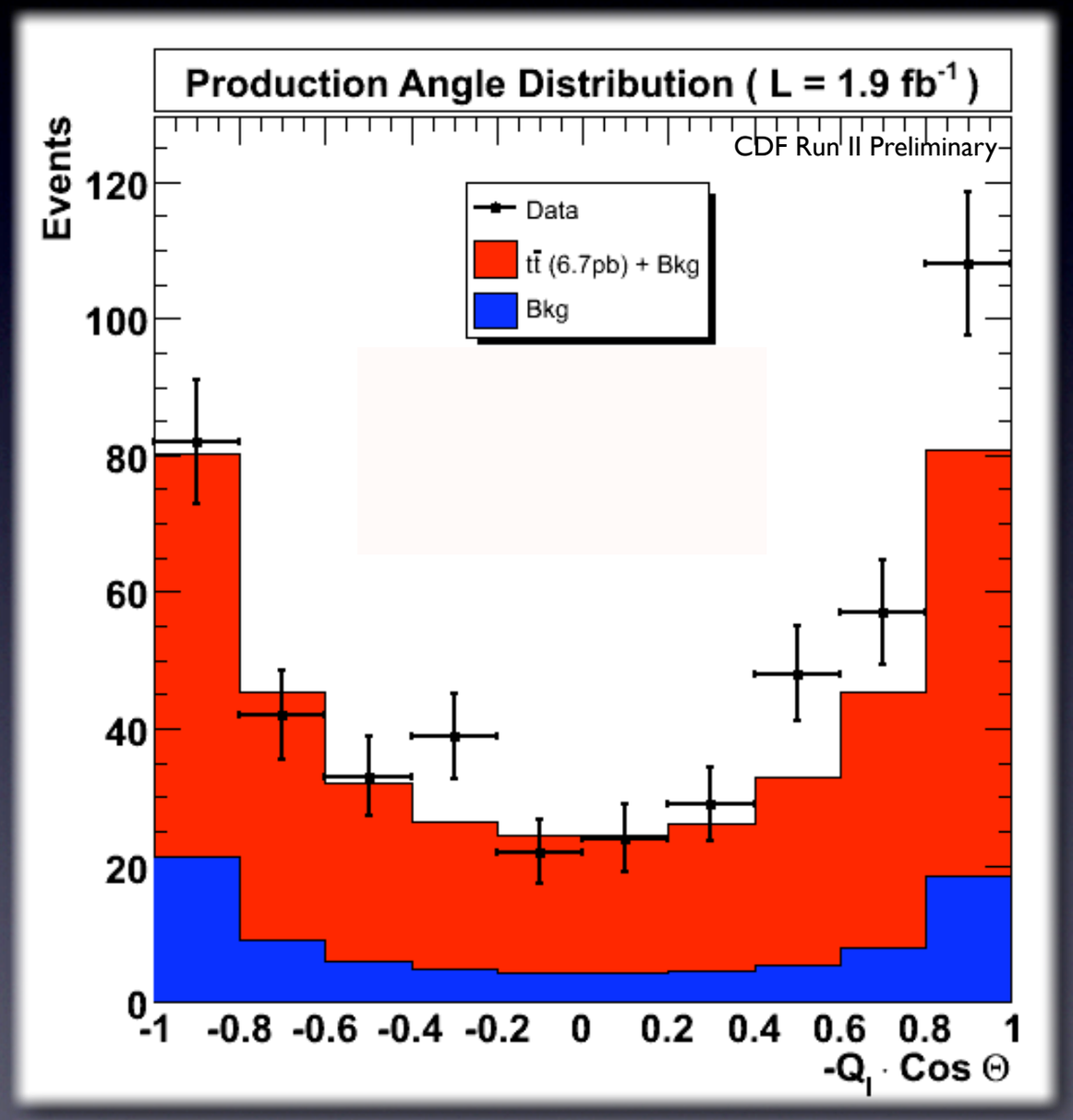

Background Correction

- Backgrounds dilute the signal and, if they have any asymmetric components, bias it
- To properly correct for this effect we need to know the prod angle shape in background
- The background Cos Θ distribution is formed by putting the background models through the entire selection and reconstruction machinery

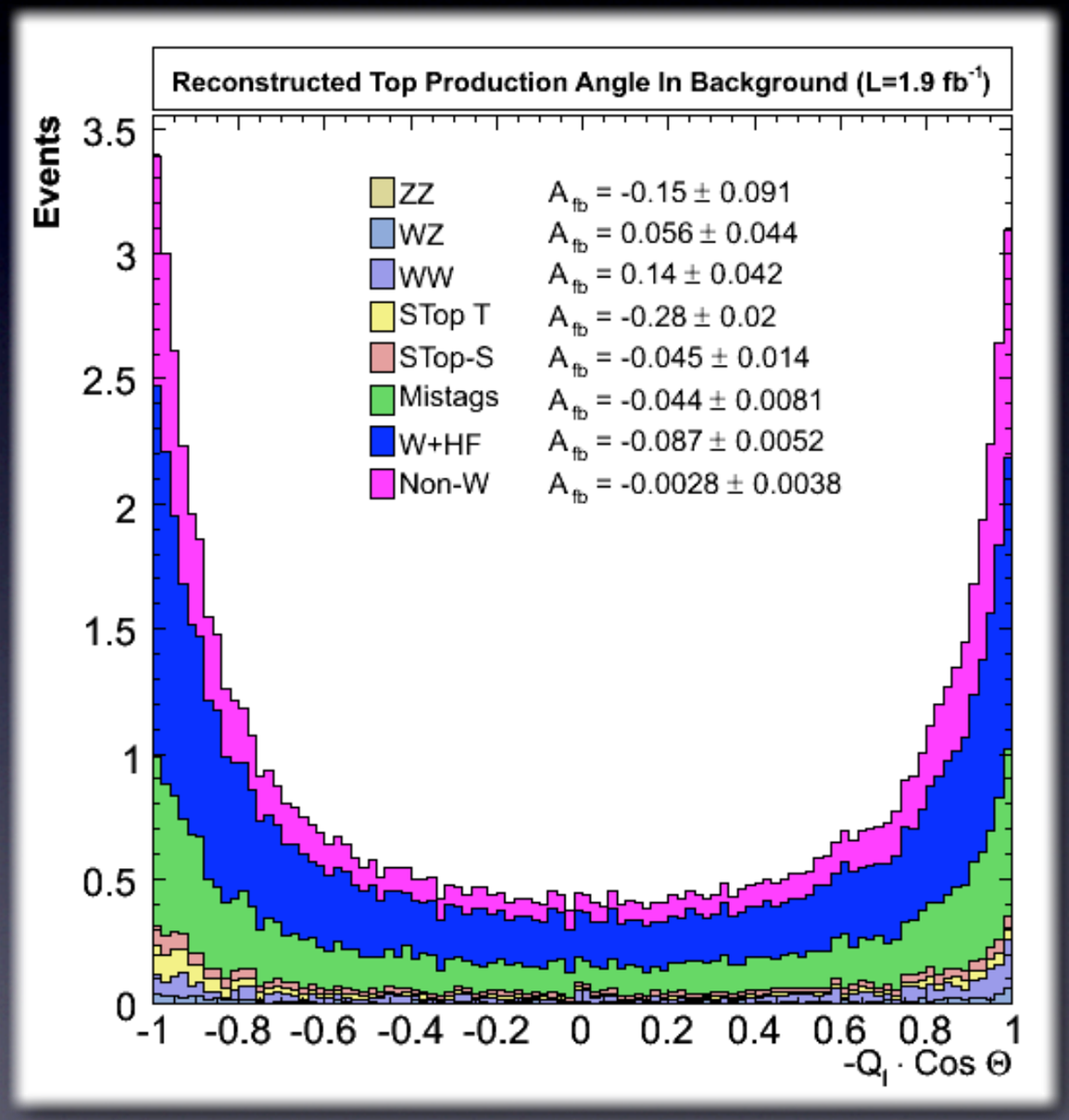

Background Correction

- How do we know the background shape is correct?
- Test in a background dominated side-band region (Anti-Tag Sample)
- Background prediction is consistent in this distribution

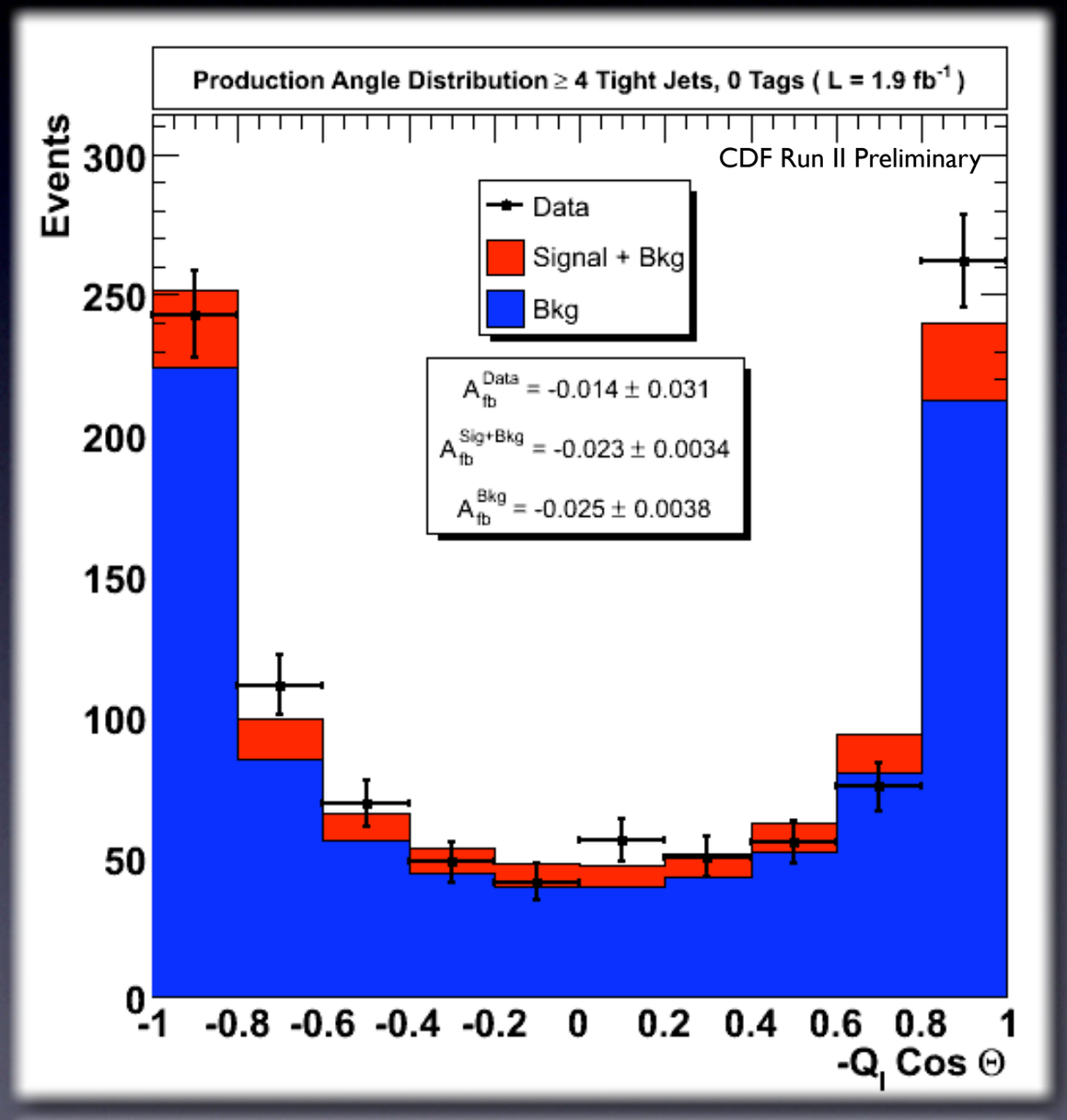

Background Correction

- We correct for backgrounds by subtracting the predicted background shape, normalized by method II, from the data

- The resulting distribution is the predicted production angle shape for ttbar after selection and reconstruction

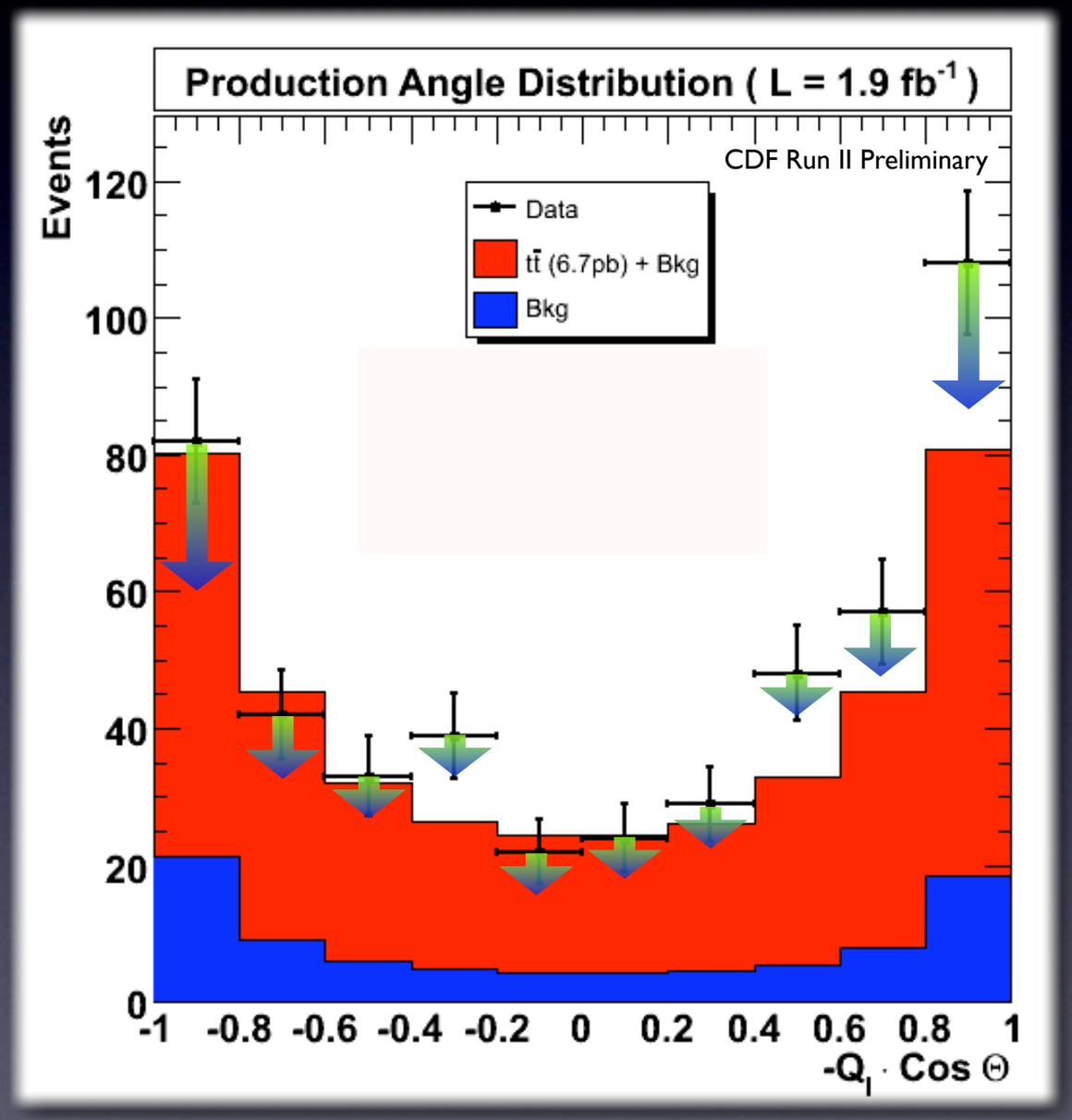

Selection and Reconstruction Effects

- Example production angle distribution with A_{fb} = 30 %
- So what happens as these events are placed through selection and reconstruction?

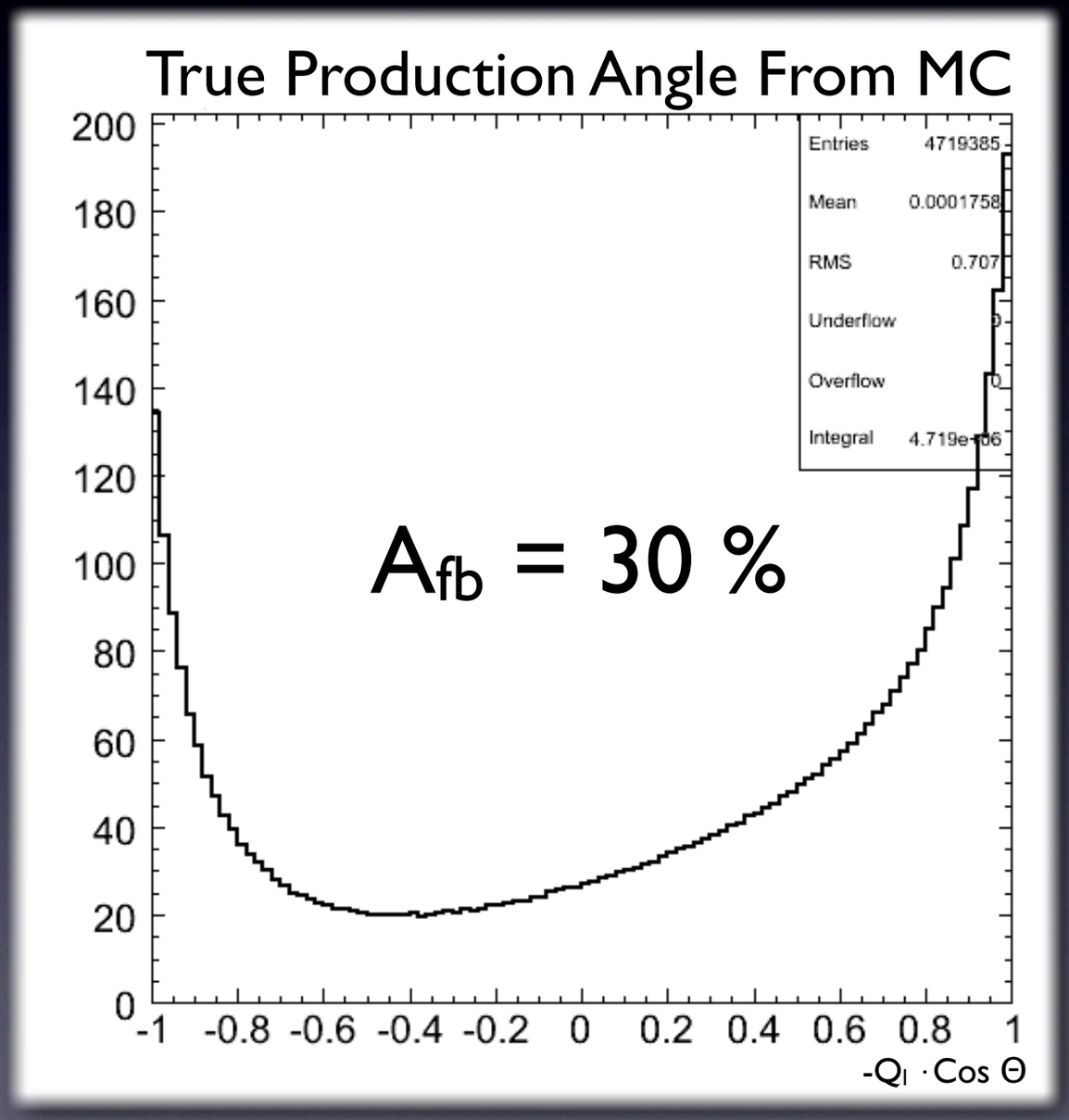

Selection and Reconstruction Effects

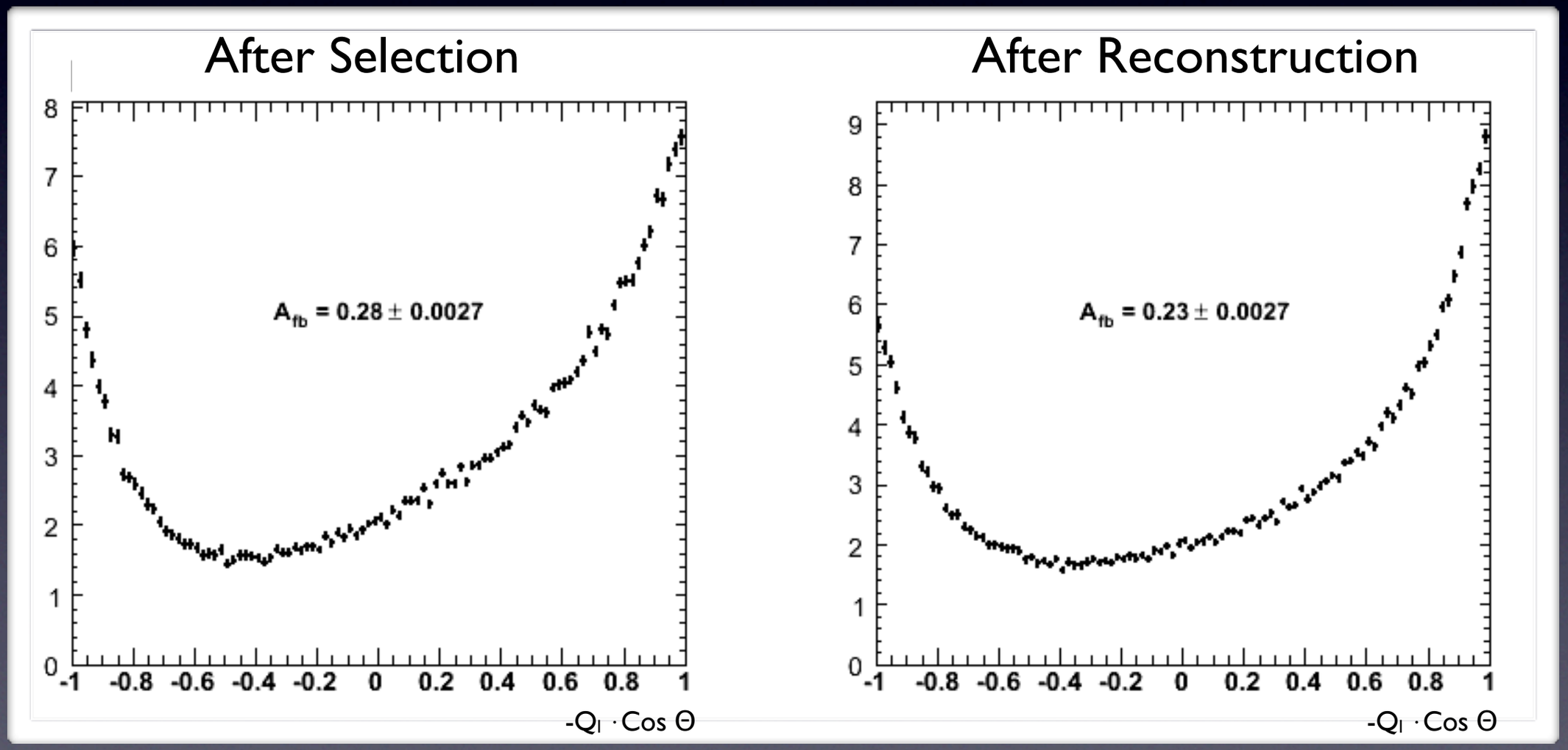

Reconstruction Corrections

- The effect of imperfect reconstruction is a smearing of events between bins and therefore a dilution of the front-back asymmetry

- We model this effect in ttbar Monte Carlo in order to correct the data

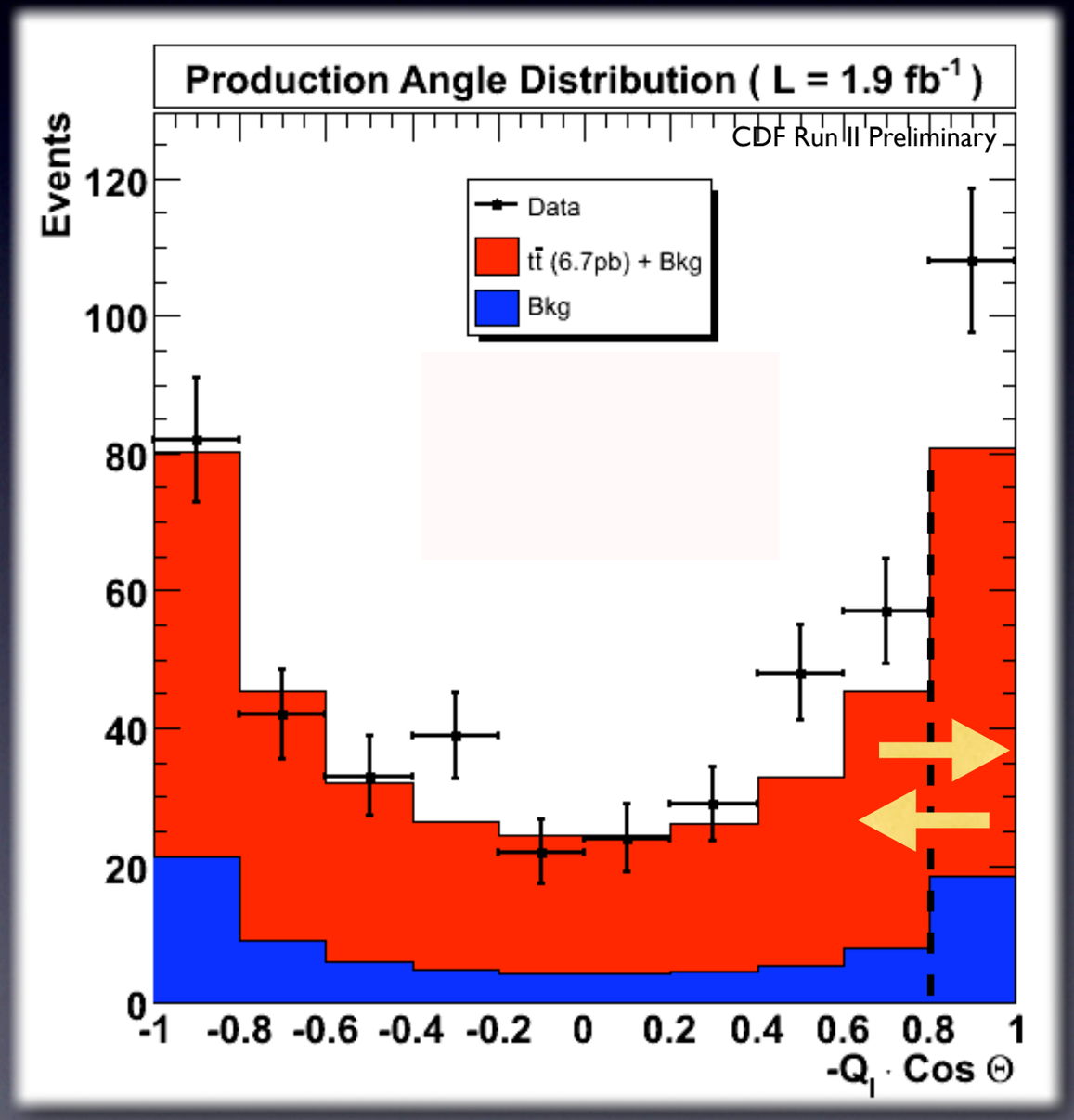

Reconstruction Corrections

- The smearing of the "true" distribution is related to the "reconstructed" distribution by a matrix

$$[Recon] = \begin{bmatrix} s_{0,0} & s_{0,1} & \cdots & s_{0,nbins} \\ s_{1,0} & s_{1,1} & \cdots & \cdots \\ \cdots & \cdots & \cdots & \cdots \\ s_{nbins0} & \cdots & \cdots & s_{nbins,nbins} \end{bmatrix} [True]$$

- The matrix can be inverted to correct for smearing

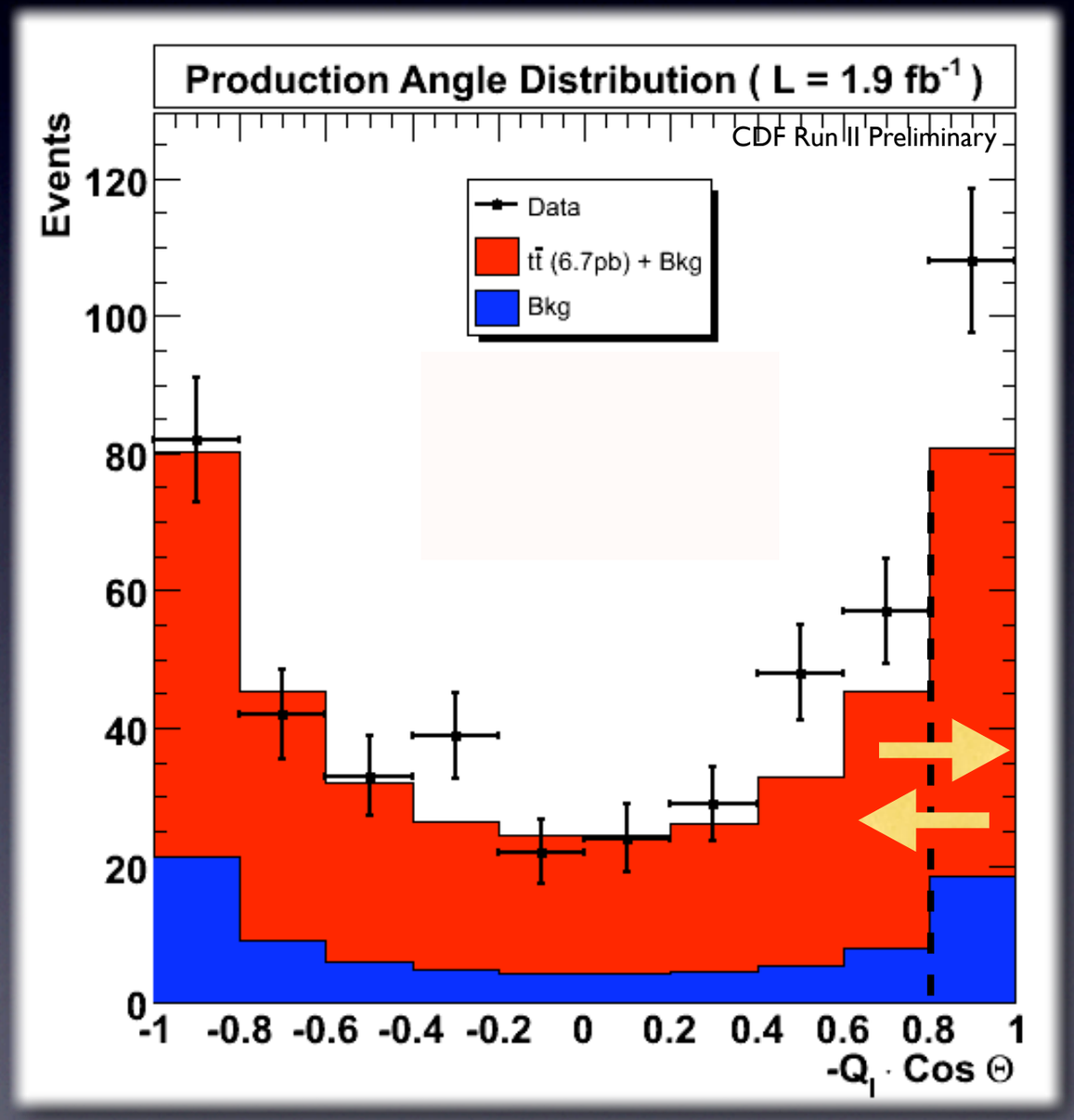

Acceptance Correction

- Asymmetries in the detector and selection could introduce a bias or skew into the observed production angle

- Plot is event acceptance of the lepton plus jets selection as a function of the top production angle distribution

- Acceptance for bin 'i' :

$$Accep_i\,(Cos\Theta) = \frac{N_i^{selected}\,(Cos\Theta)}{N_i^{pre-cuts}\,(Cos\Theta)}$$

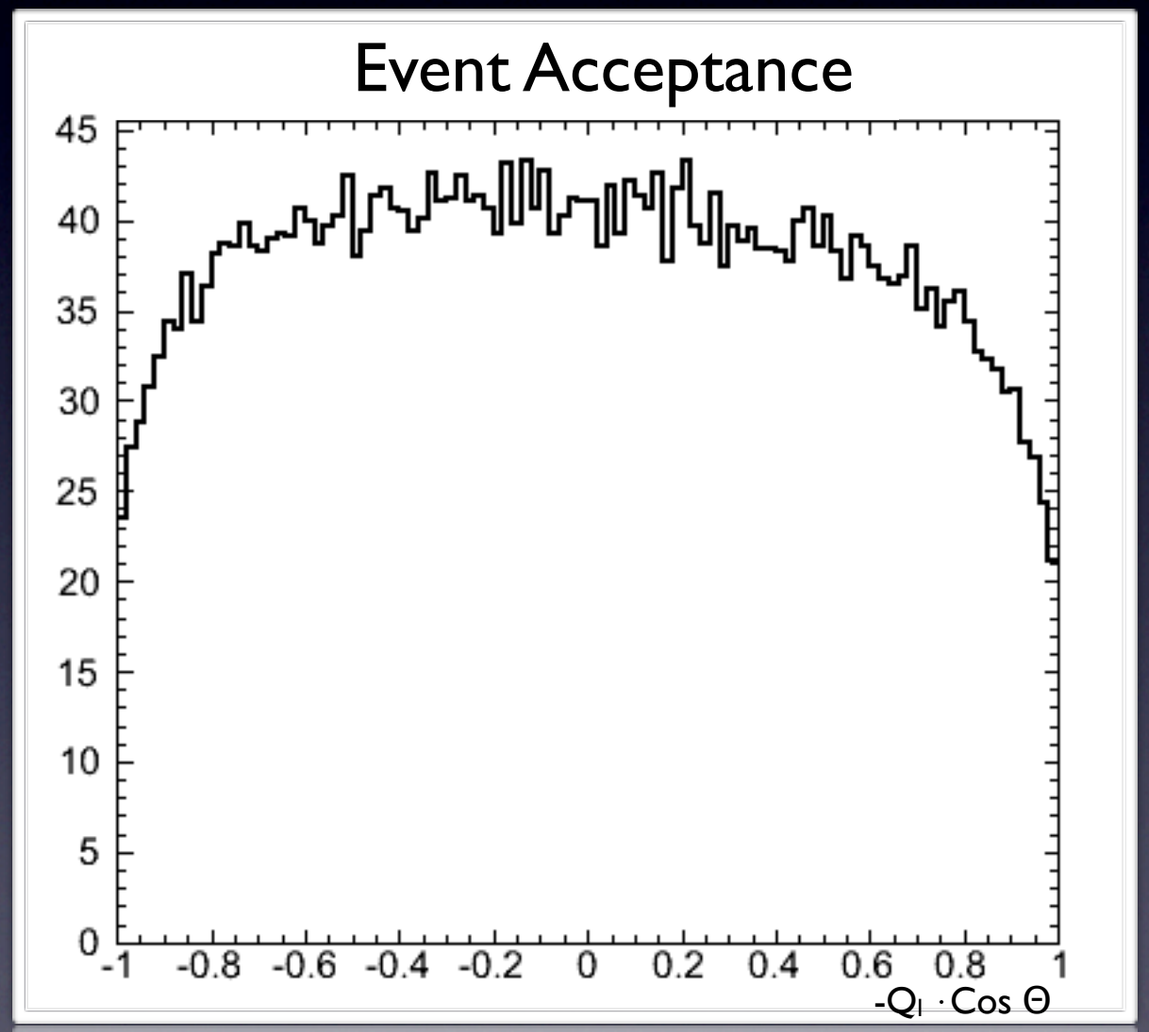

Acceptance Correction

- The distribution "after selection" can be related to the "true" distribution again by a matrix

$$[Selected] = \begin{bmatrix} \epsilon_0 & 0 & 0 & 0 \\ 0 & \epsilon_1 & 0 & 0 \\ 0 & 0 & \dots & 0 \\ 0 & 0 & 0 & \epsilon_{nbins} \end{bmatrix} [True]$$

- The matrix can be inverted to correct for acceptance

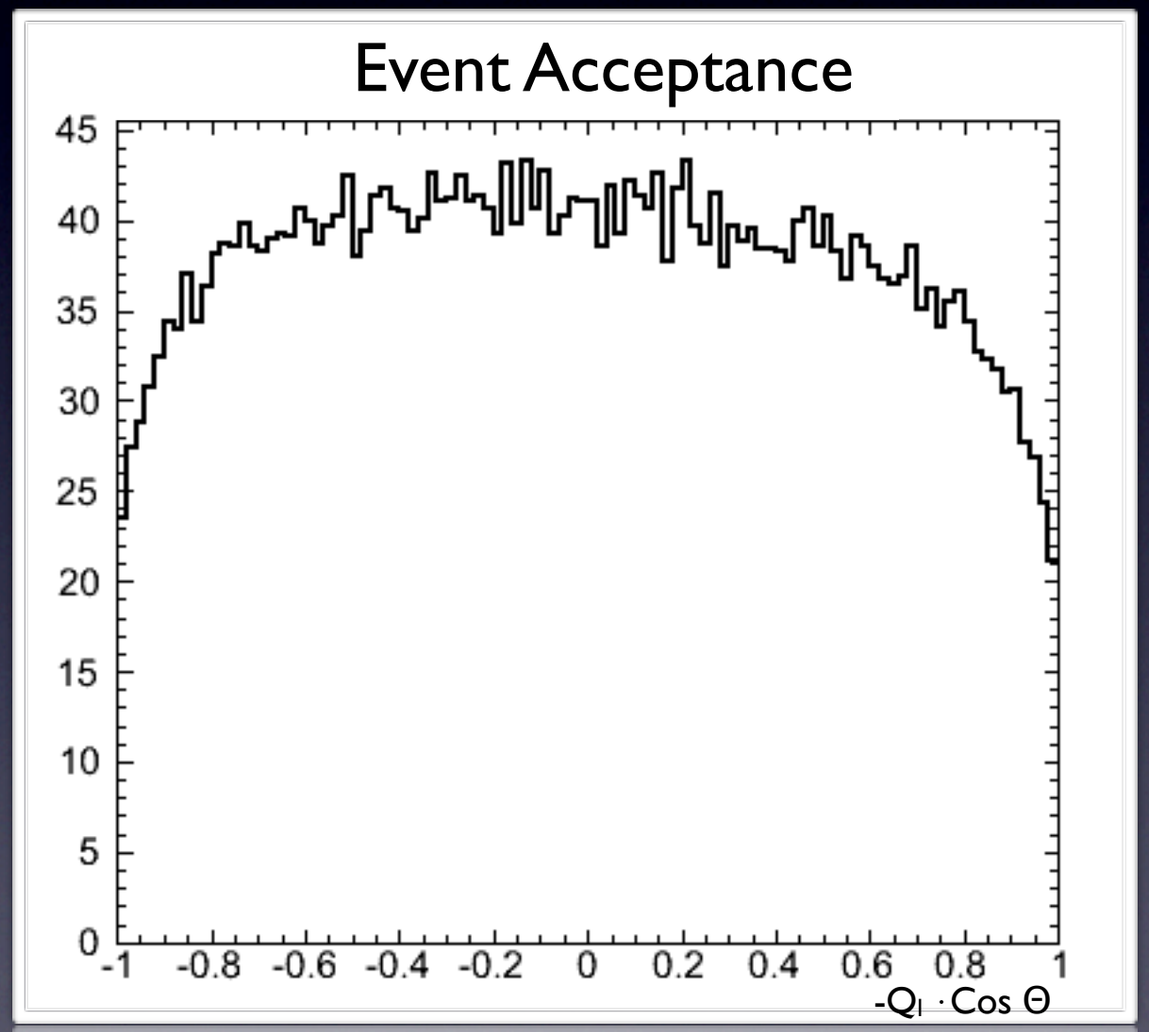

Putting It All Together

- The correction matrices are cascaded and applied to the background corrected data to produce a result independent of the effects of acceptance and reconstruction

$$Corrected = A^{-1} \cdot S^{-1} \cdot (Data - Bkg)$$

Measurement

- Begin with the raw distribution and rebin to create 4 uniform sized bins

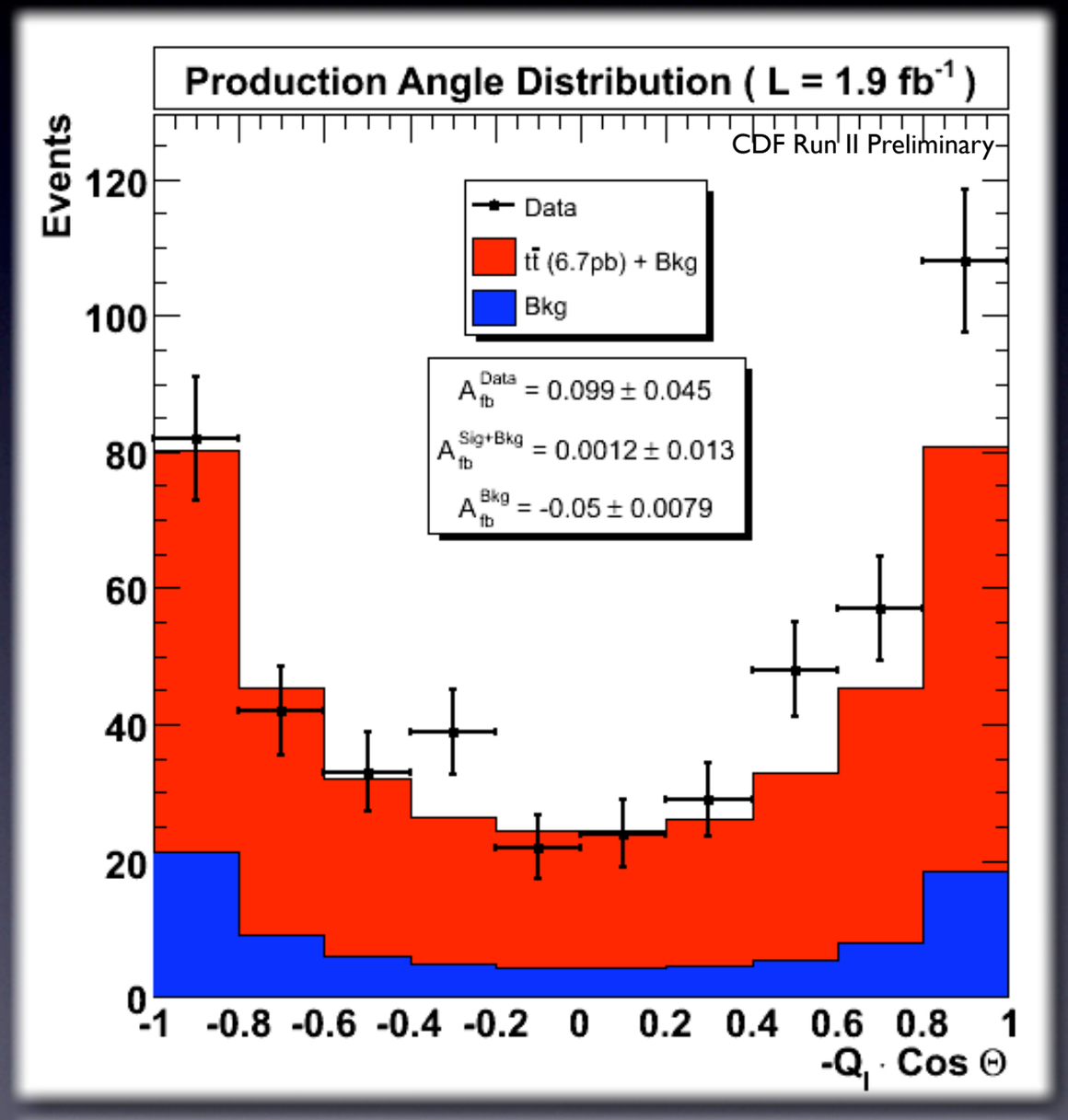

Measurement

- Begin with the raw distribution and rebin to create four uniform sized bins

Event Counts Bin-by-Bin

	bin 0	bin 1	bin 2	bin 3
Data	141	77	72	194
Bkg	33.4	12.0	11.5	29.6
Bkg-Corr	107.6	65.0	60.5	164.4

CDF Preliminary Lumi = 1.9 fb^{-1}

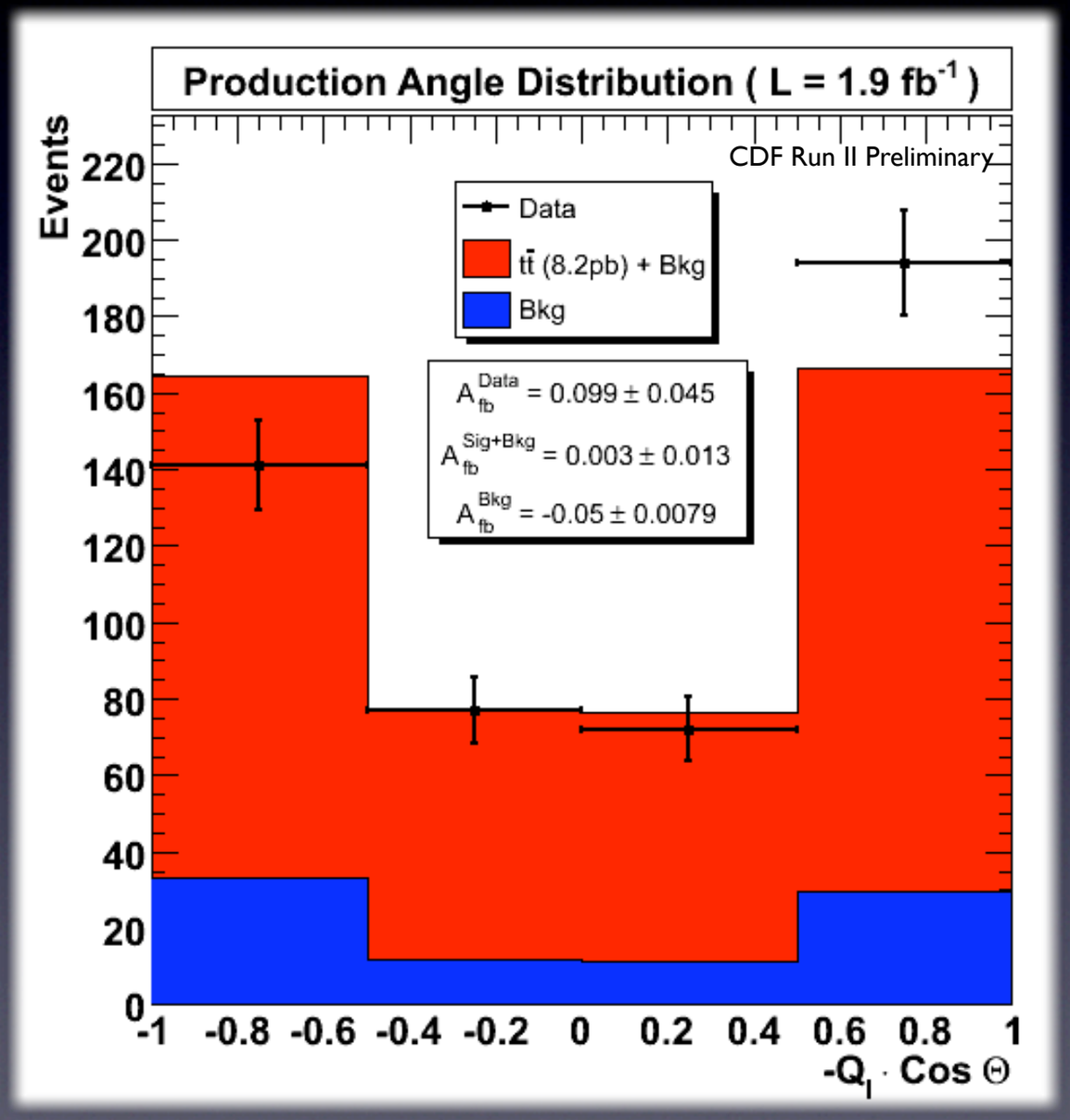

Measurement

- Push background corrected data through acceptance and reconstruction matrices

	bin 0	bin 1	bin 2	bin 3
Data	141	77	72	194
Bkg	33.4	12.0	11.5	29.6
Bkg-Corr	107.6	65.0	60.5	164.4

$$Corrected = A^{-1} \cdot S^{-1} \cdot (Data - Bkg)$$

- And calculate the "corrected" front-back asymmetry.....

Measurement

The Forward-Backward Asymmetry In Pair Production of Top In The ppbar frame
For Mt = 175.0 GeV

$$A_{fb} = 0.17 \pm (0.07)^{stat} \pm (0.04)^{syst}$$

The Forward-Backward Asymmetry In Pair Production of Top In The ppbar frame
For Mt = 170.0 GeV

$$A_{fb} = 0.18 \pm (0.08)^{stat} \pm (0.04)^{syst}$$

Measurement

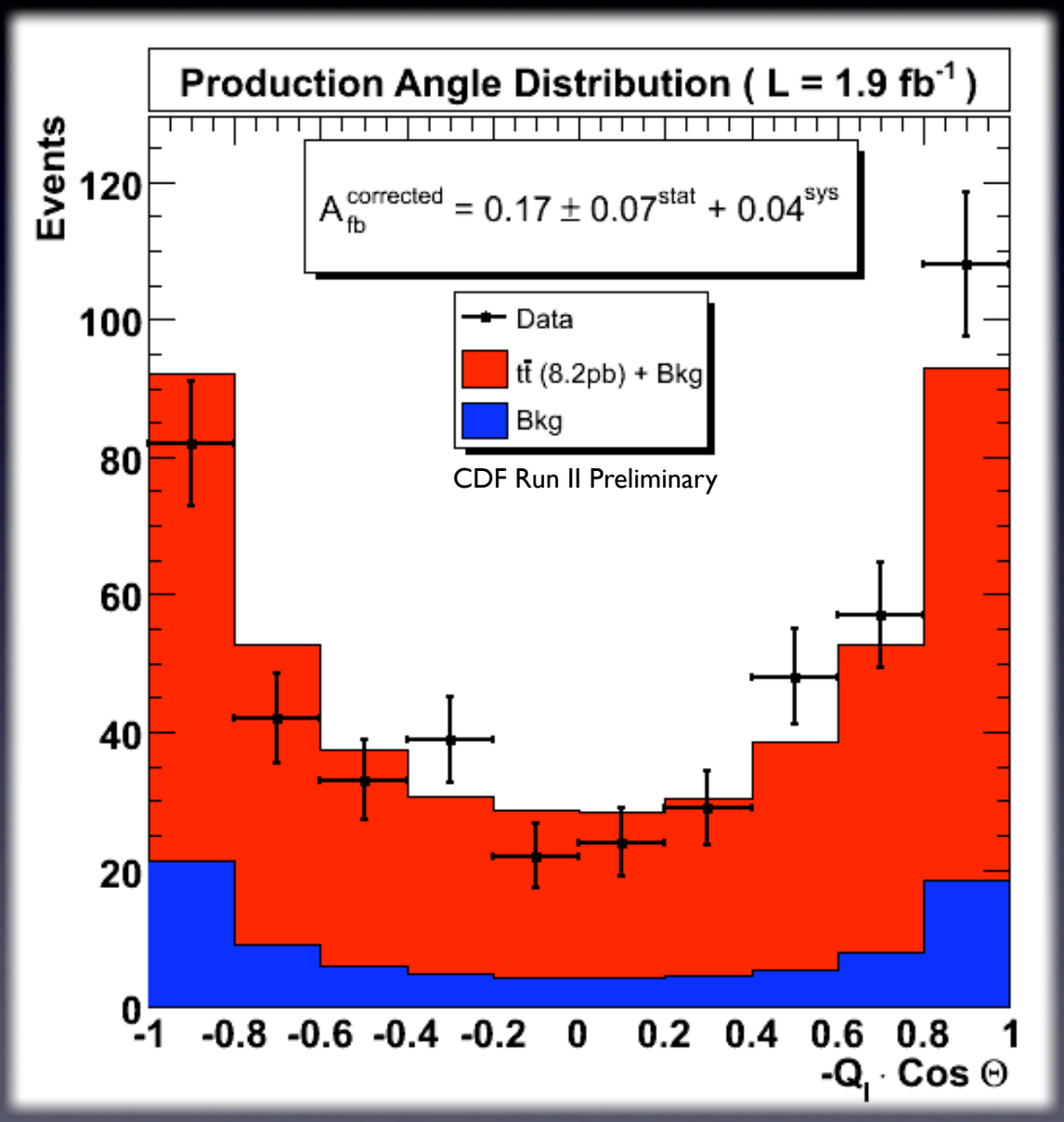

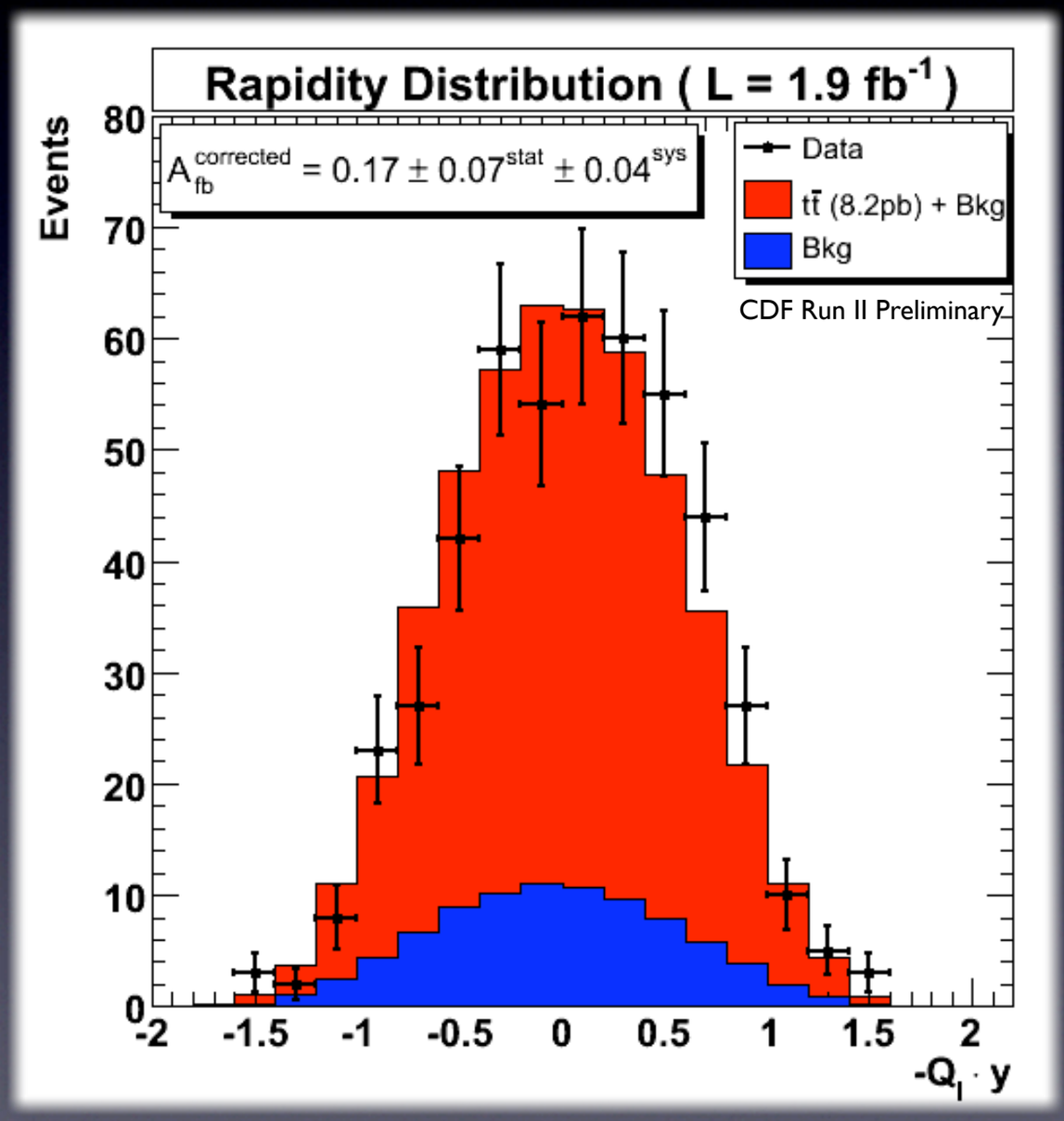

Consistency Check

- If this value really represents the underlying asymmetry then I should be able to put ttbar signal Monte Carlo with an A_{fb} = 0.17 through the machinery of the analysis and observe agreement at the "reconstructed" level with data
- This is considered an alternative method of correction to matrix correction technique (Also known as a Template Method)

Template Check

Normal

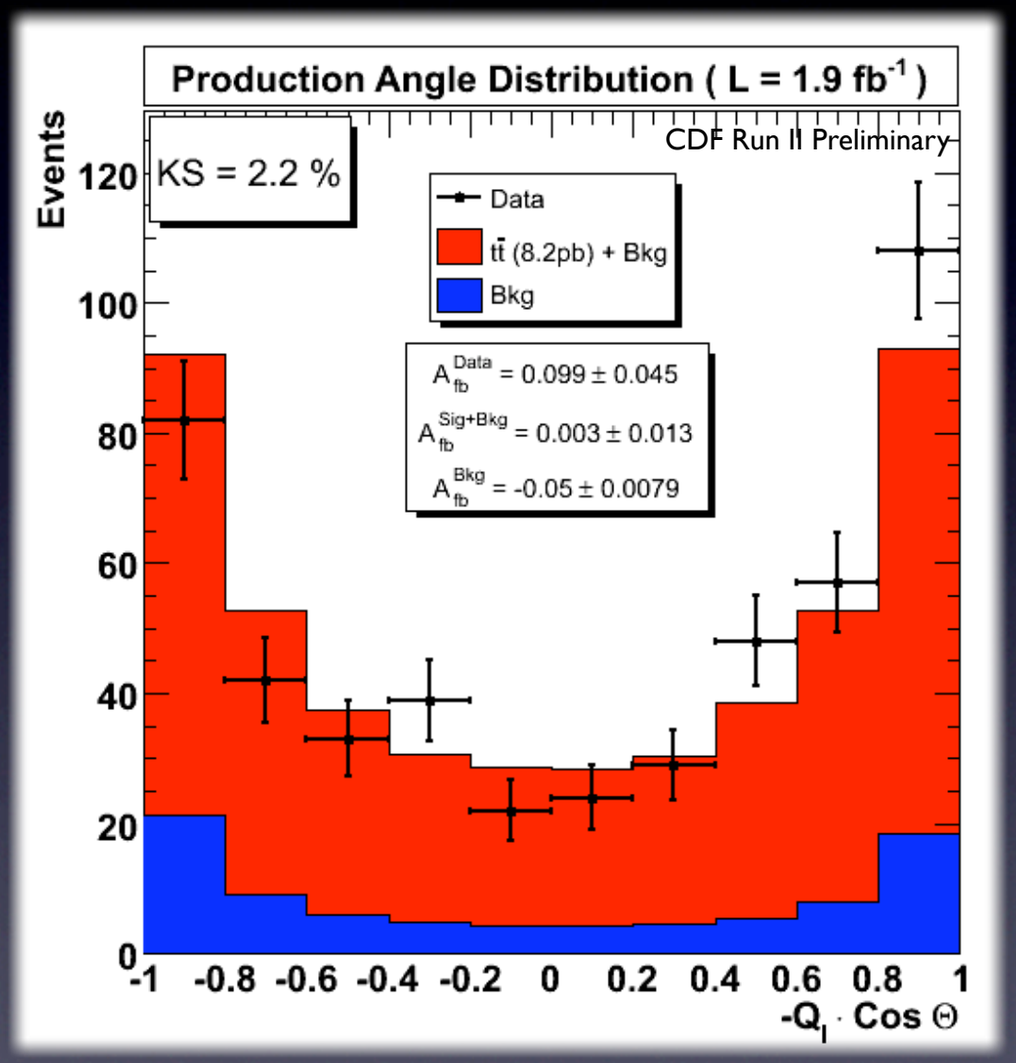

Reweighted

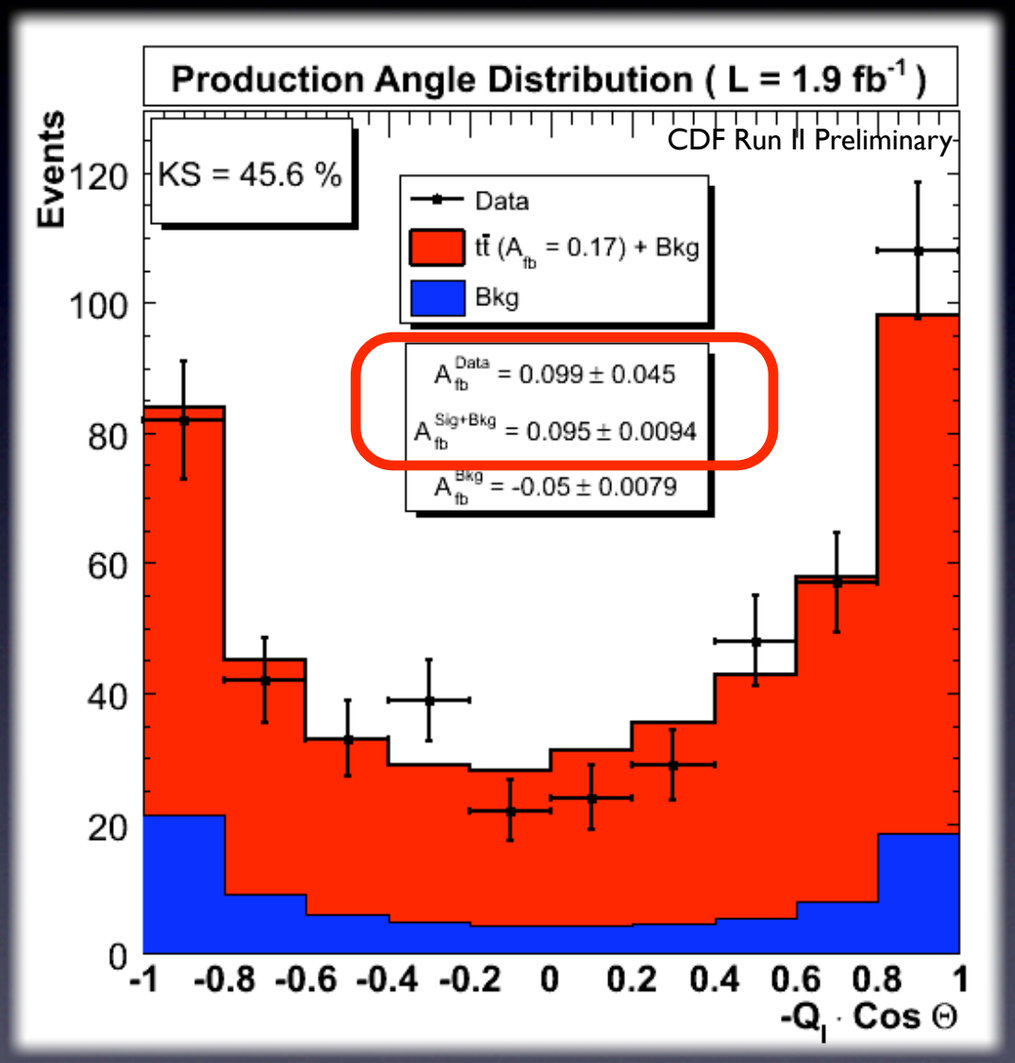

Template method agrees well with measured value

So Is It Real?

$$A_{fb} = 0.17 \pm (0.07)^{stat} \pm (0.04)^{syst}$$

- The measured value is ~ 2 sigma from the SM and a little over 2 sigma from zero
- With that said, the asymmetry measurement itself does not necessarily reflect the difference in "shape" we see in the production angle
- A KS test of the shape, comparing data to prediction, reveals ~ 1-2 % compatibility
- If data scales with luminosity we should have the statistics to measure a 20% asymmetry to 3 sigma by this summer (3 fb^{-1})

Appendix

Error Propagation

$$\mathbf{A}_{fb} = \frac{\sum_i^{nbins} \zeta_i \sum_j^{nbins} \mathbf{M}_{i,j} \cdot \mathbf{n}_j}{\sum_i^{nbins} \alpha_i \sum_j^{nbins} \mathbf{M}_{i,j} \cdot \mathbf{n}_j}$$

- Now we can just perform error propagation in a generalized way

$$\sigma^2_{A_{fb}} = \sum_i \sigma^2_{n_i} \cdot \left(\frac{\delta A_{fb}}{\delta n_i}\right)^2$$

σ_{n_i} = Stat Uncertainty in bin i for bkg-corr data

$$\frac{\delta A_{fb}}{\delta n_x} = \frac{\left(\sum_i \zeta_i \cdot S_{i,x}\right) \cdot (\alpha \cdot N) - \left(\sum_i \alpha_i \cdot S_{i,x}\right) \cdot (\zeta \cdot N)}{(\alpha \cdot N)^2}$$

Varying The Underlying Shape

- Exotic distributions are placed through the method
- The resulting reconstructed distribution is then corrected and the asymmetry measured

Distribution	Truth A_{fb}	Reconstructed A_{fb}	Corrected A_{fb}
$A_{fb} \cdot \cos\Theta + K \cdot \cos^6\Theta$	0.2	0.13	0.22
$A_{fb} \cdot \cos\Theta$	0.2	0.11	0.21
$A_{fb} \cdot \cos\Theta + K \cdot \sin^2\Theta$	0.2	0.13	0.22
$A_{fb} \cdot \cos^5\Theta$	0.2	0.107	0.20

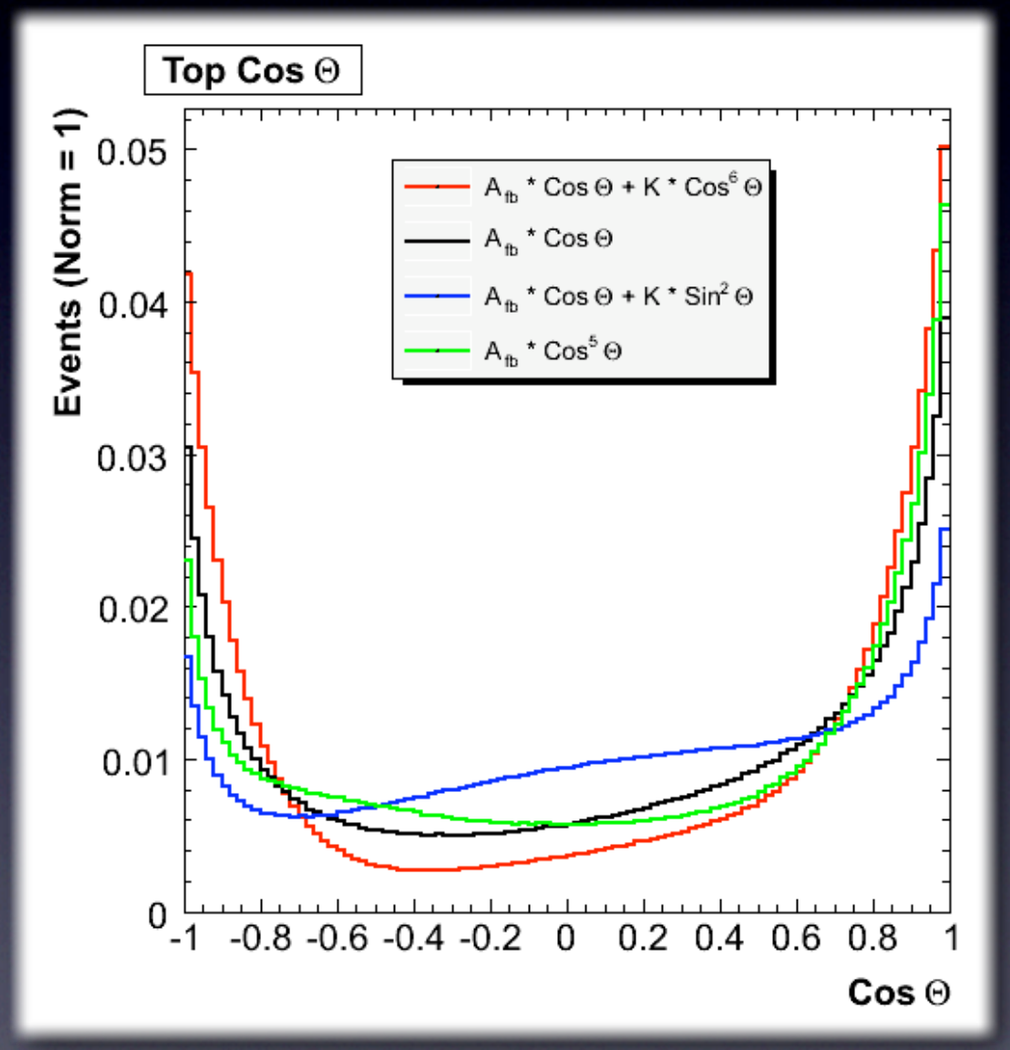

The method is invariant to reasonable differences in the underlying distribution

Measurement

- Push background corrected data through acceptance and reconstruction matrices

	bin 0	bin 1	bin 2	bin 3
Data	141	77	72	194
Bkg	33.4	12.0	11.5	29.6
Bkg-Corr	107.6	65.0	60.5	164.4

$$[N_{corrected}] = \begin{bmatrix} 0.97 & 0 & 0 & 0 \\ 0 & 1.20 & 0 & 0 \\ 0 & 0 & 1.10 & 0 \\ 0 & 0 & 0 & 0.90 \end{bmatrix}^{-1} \cdot \begin{bmatrix} 0.81 & 0.21 & 0.08 & 0.037 \\ 0.1 & 0.57 & 0.13 & 0.036 \\ 0.043 & 0.14 & 0.58 & 0.095 \\ 0.046 & 0.09 & 0.21 & 0.83 \end{bmatrix}^{-1} \cdot \begin{bmatrix} 107.6 \\ 65.0 \\ 60.5 \\ 164.4 \end{bmatrix}$$

Raw A_{fb} Vs Lumi

- How does the significance of the asymmetry change with luminosity? Sample divided by data taking period at CDF
- Note this is the raw asymmetry, so NOT corrected

A_{fb} For Each Data taking period

	0	1-4	5-7	8	9	10	11	12
Luminosity (pb^{-1})	332	363	258	166	157	243	235	162
Integrated Lumi (pb^{-1})	332	695	953	1119	1276	1519	1754	1916
A_{fb}^{raw} By Section	0.04 ± 0.10	0.21 ± 0.10	0.11 ± 0.12	0.05 ± 0.15	0.14 ± 0.12	0.08 ± 0.16	0.14 ± 0.14	-0.19 ± 0.19
Cumulative A_{fb}^{raw}	0.04 ± 0.10	0.13 ± 0.07	0.12 ± 0.06	0.11 ± 0.057	0.12 ± 0.052	0.11 ± 0.049	0.12 ± 0.046	0.10 ± 0.045
Significance From Zero	0.41	1.76	2.0	1.97	2.26	2.3	2.5	2.2

CDF Run II Preliminary

Acceptance Skew

- Acceptance plot is really just the HEPG top production angle distribution AFTER SELECTION divided by that BEFORE SELECTION

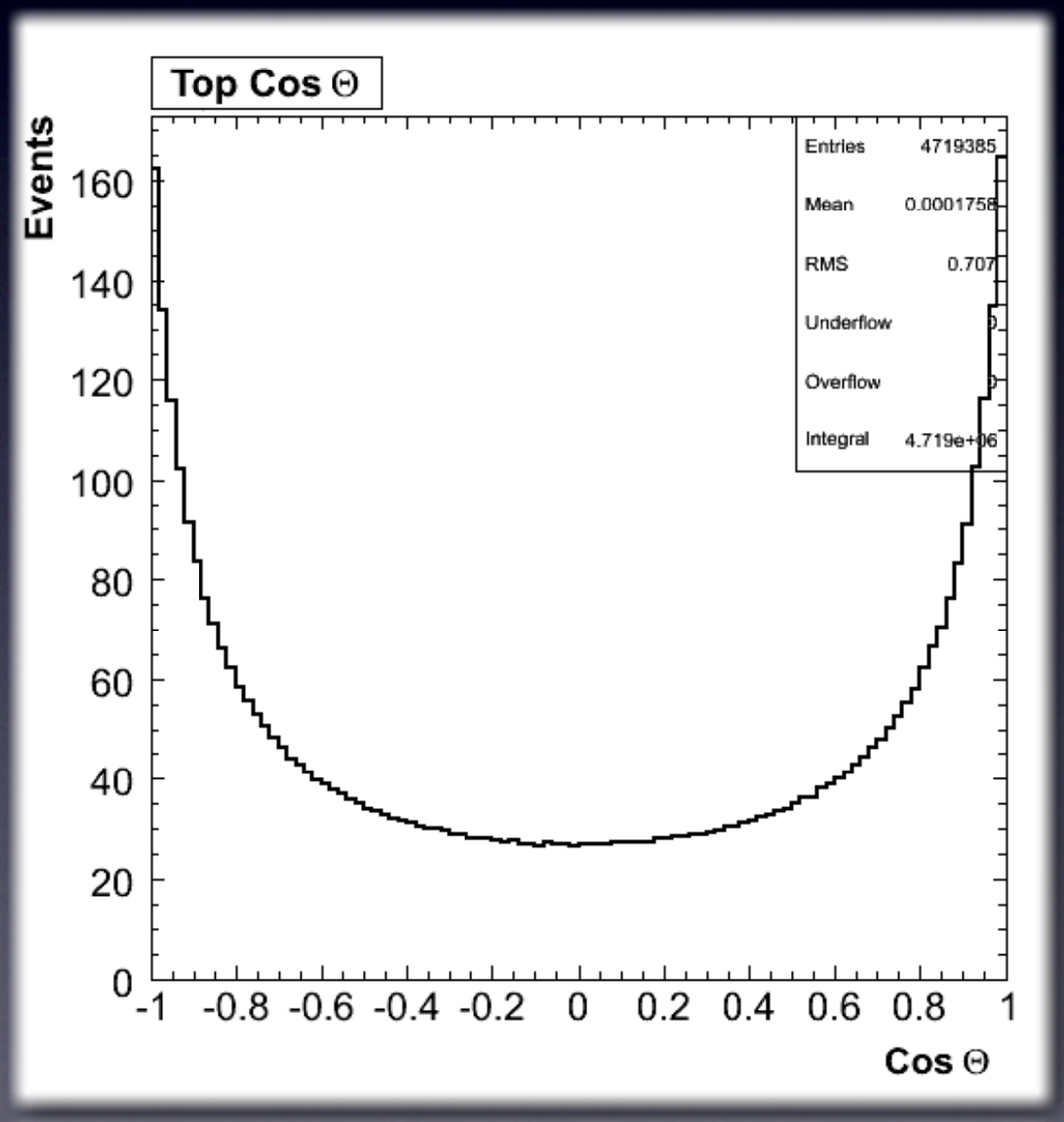

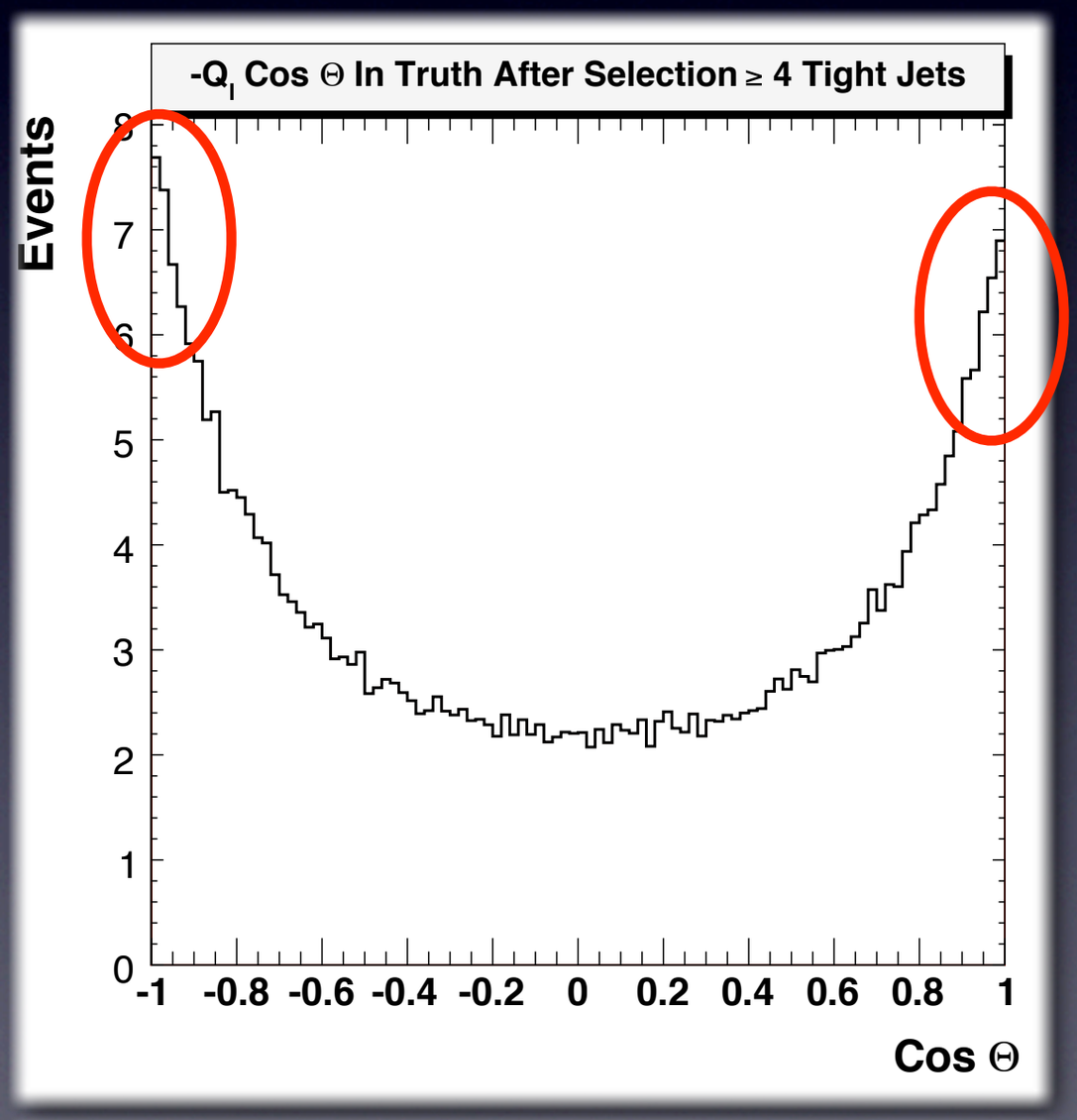

Acceptance Skew

- Can identify the culprit by breaking this down by jet multiplicity

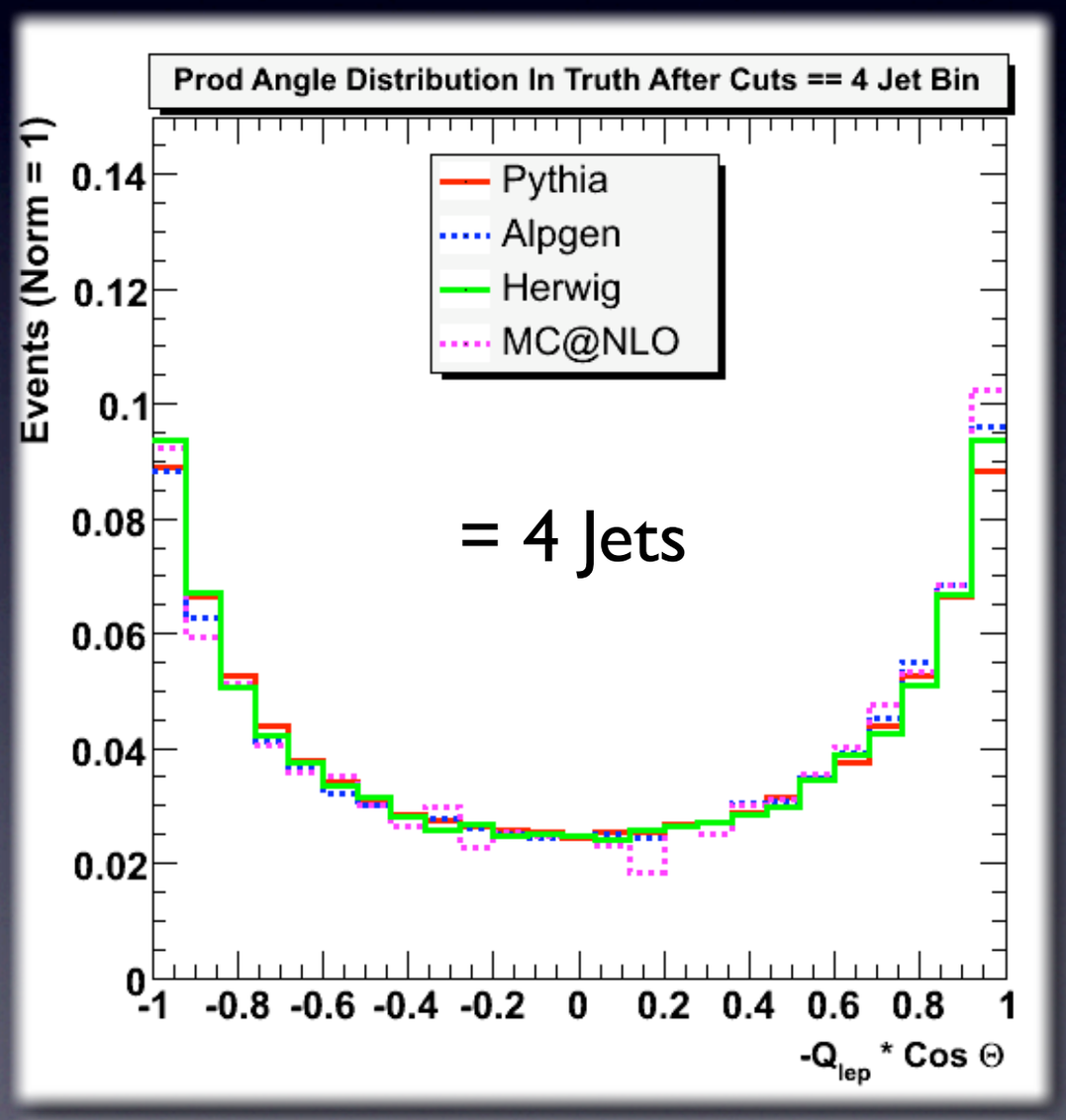

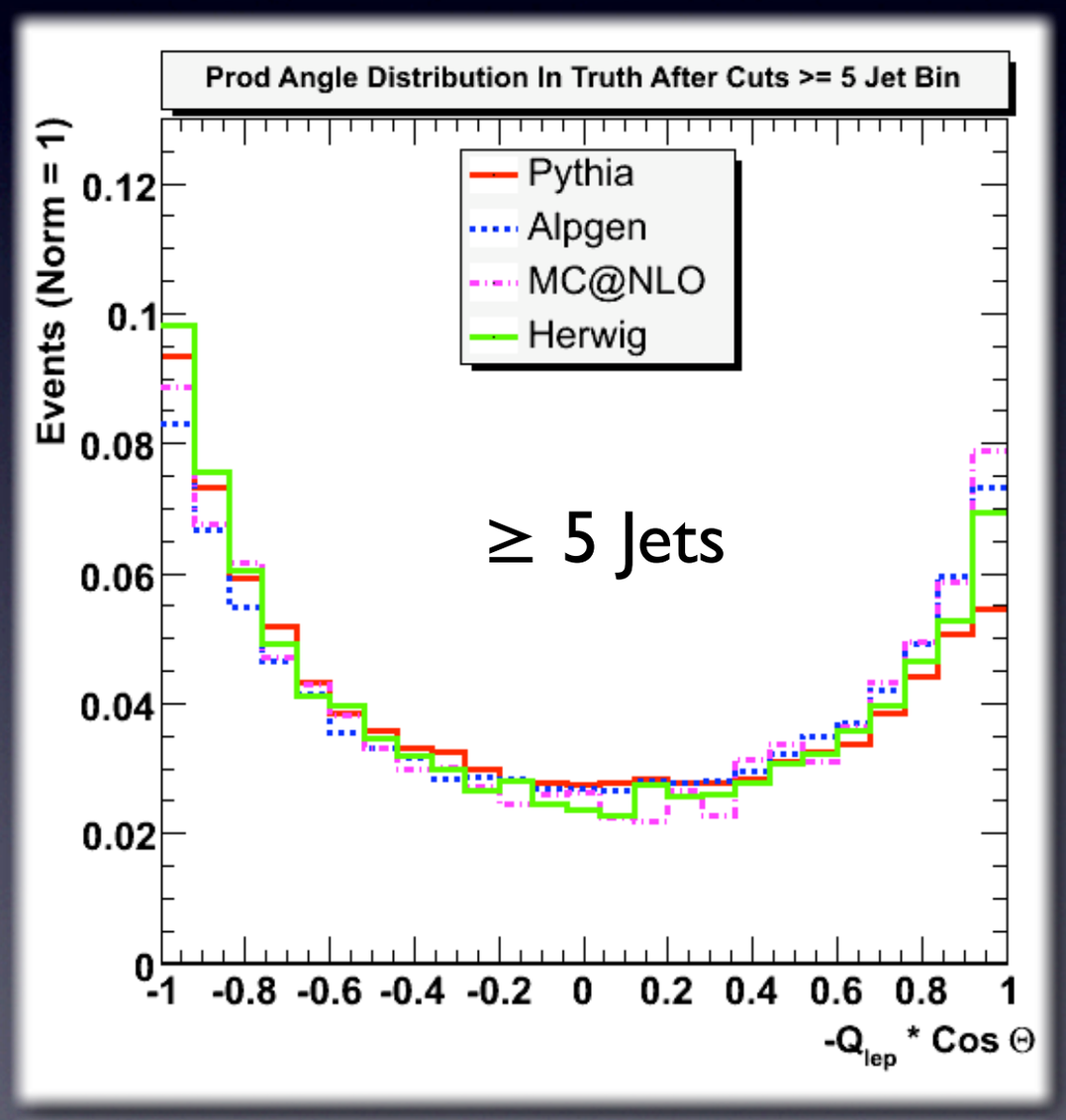

Acceptance Skew

- Break down 5 jet bin into Top and Anti-Top Production Angle Vs Truth(Note i'm not X by charge now)
- Very clear top is being polarized in one direction in the 5 jet bin
- So Why?
- Answer: Color flow and angular ordering of radiation

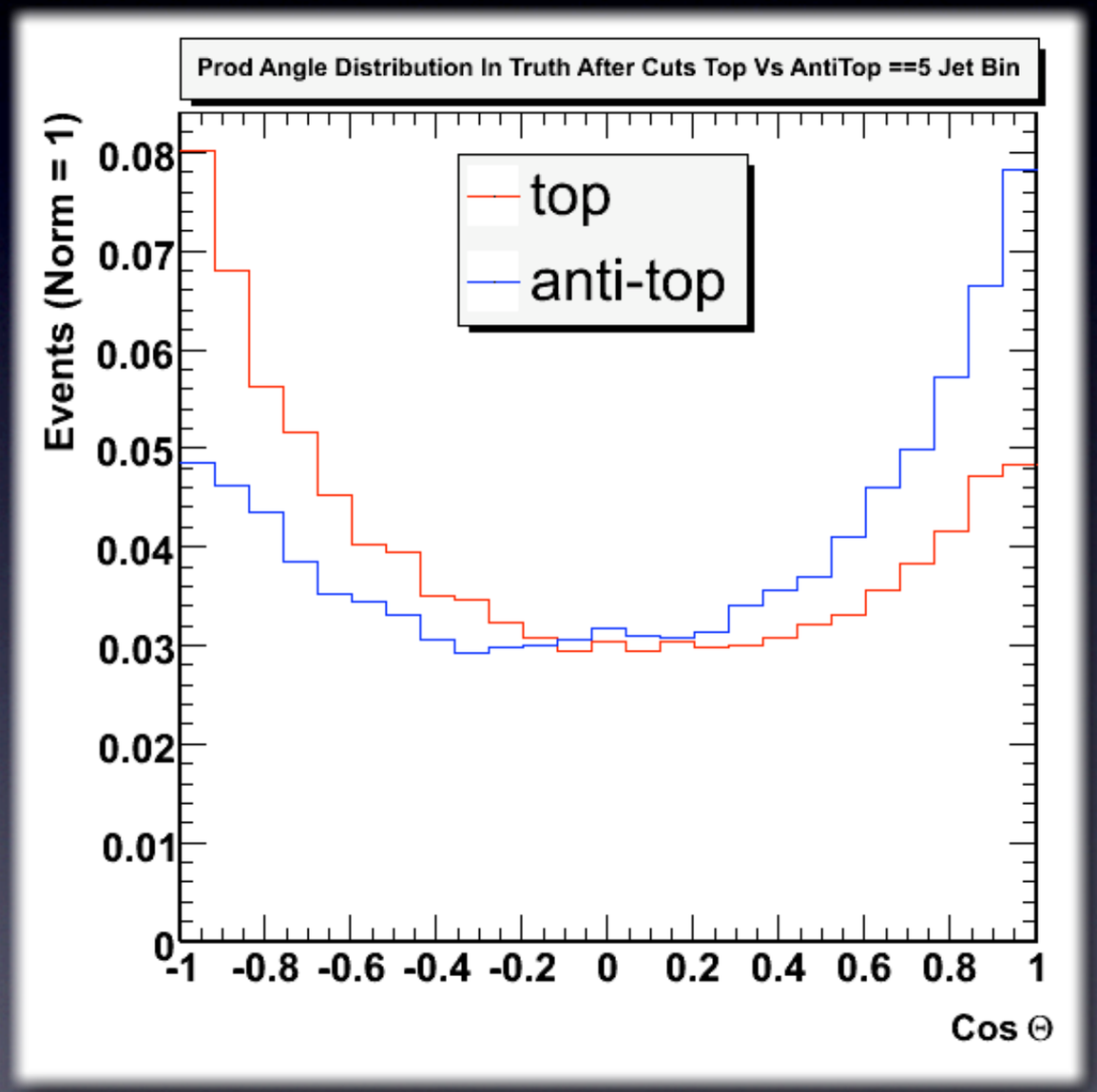

Color Flow Effects

- Angular ordering in QCD says that radiation is mostly contained within the cone formed by color lines.
- ttbar's are mostly produced at threshhold so top is color connected to the incoming quark and tbar to the incoming qbar
- When top is produced in the same direction as the incoming quark, then the angle between them is small and angular ordering says most of the radiation flies down the beam pipe

- When top is produced in the opposite direction, the angle is large (180 degrees) so there is a larger angle for the radation to go

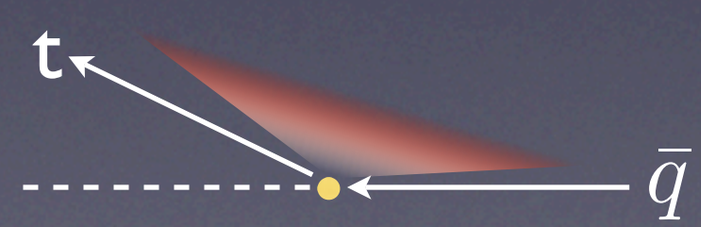

Color Flow Effects

- Because we are selecting more central jets we are biased towards

- which translates into prefering

- This results in a polarization in the selected ttbar events in the 5 jet bin

- **<u>Thanks To S. Mrenna</u>**

MC Comparison

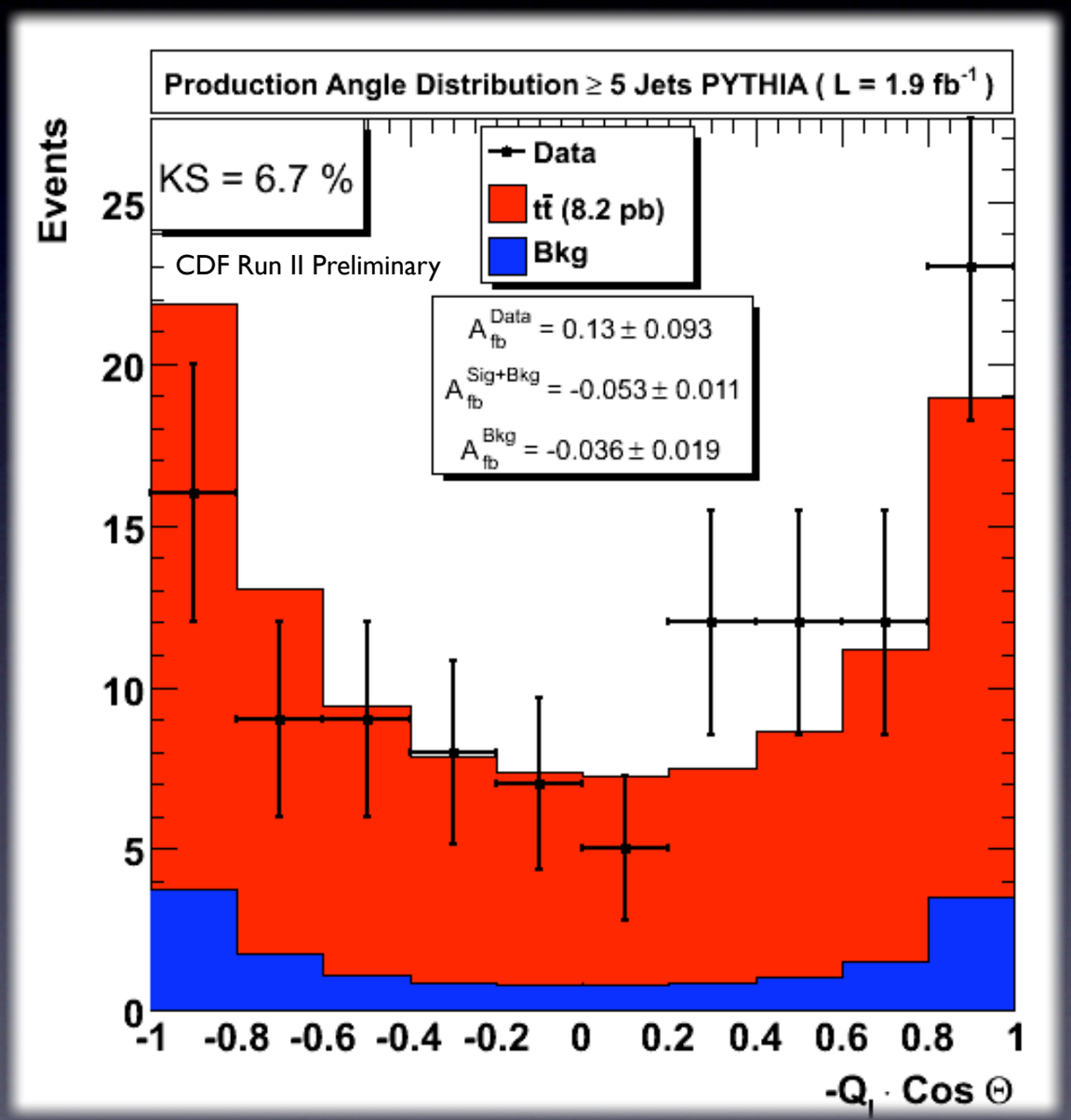

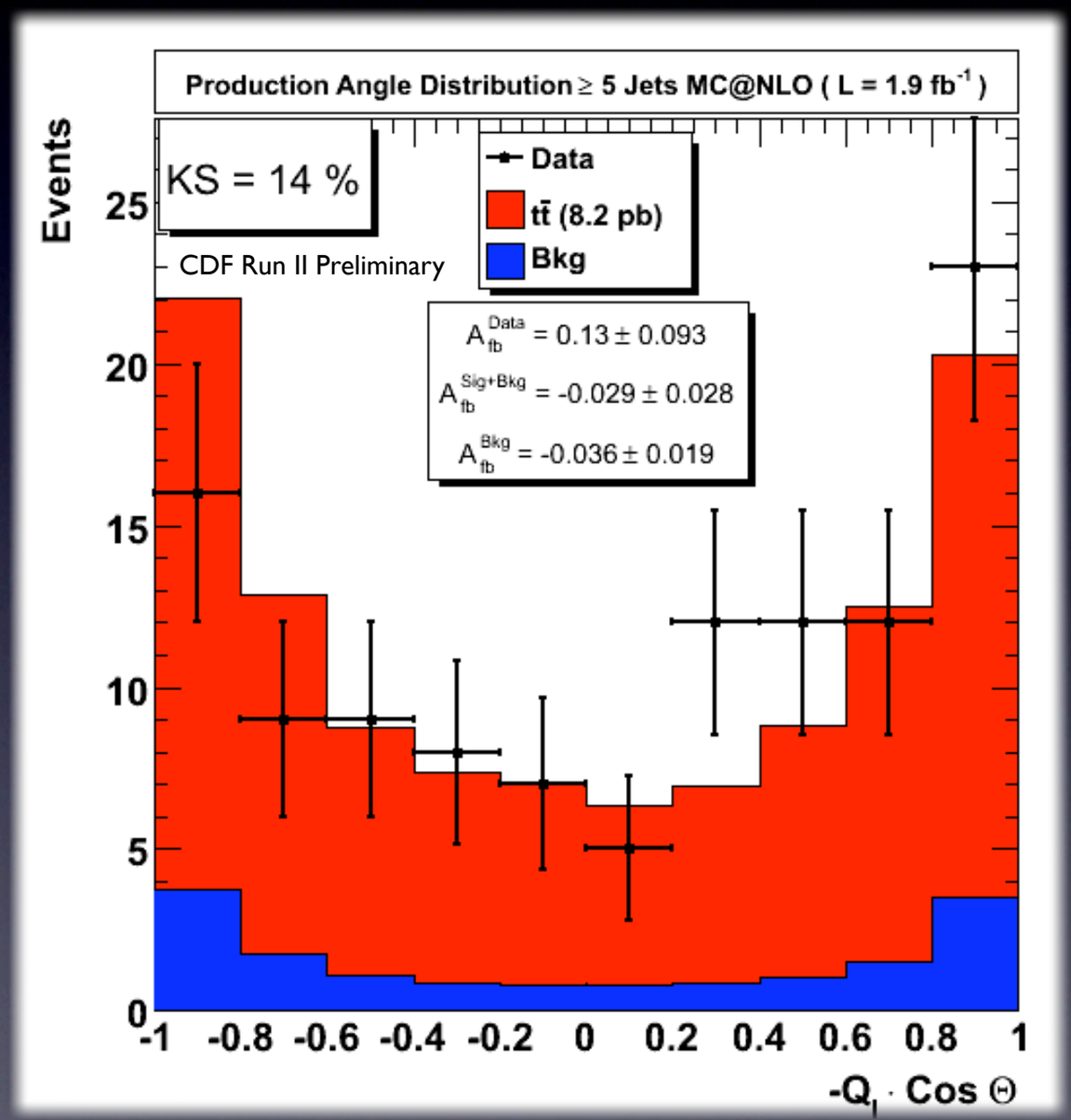

Systematics

Systematic Uncertainties on A_{fb}

SYSTEMATIC	-Δ	+Δ	σ
MC GEN	0.000	0.012	0.012
JES	-0.005	0.004	0.005
ISR	0.000	0.004	0.004
FSR	-0.013	-0.007	0.012
UNFOLDING	-0.012	0.008	0.012
BKG SHAPE	-0.008	0.018	0.018
BKG NORM	-0.014	0.021	0.021
PDF	-0.011	0.011	0.011
TOTAL	-		0.038

CDF Preliminary