TEVATRON Collider Luminosity Upgrades

f

Dave McGinnis
Fermilab Beams Division
March 23, 2000
DOE Annual Program Review

Run II Luminosity Goals

- The luminosity goal for Run IIa is 2 fb^{-1}
  - Peak luminosity up to $2x10^{32}$ $cm^{-2}sec^{-1}$
  - Switch to 103 bunches at $1x10^{32}$ $cm^{-2}sec^{-1}$
  - Length of Run IIa is about 2 years

- The luminosity goal for Run IIa+Run IIb is 15 fb^{-1}
  - Increase antiproton intensity by 2-3
  - Peak luminosity up to $5x10^{32}$ $cm^{-2}sec^{-1}$
  - 103 bunch operation
  - Length of Run IIb is about 4 years

Luminosity Formula

$$L = \frac{3\gamma f_0}{\beta^*}\left(BN_{\bar{p}}\right)\left(\frac{N_p}{\varepsilon_p}\right)\frac{F\left(\beta^*, \theta_{x,y}, \varepsilon_{p,\bar{p}}, \sigma^L_{p,\bar{p}}\right)}{\left(1+\varepsilon_{\bar{p}}/\varepsilon_p\right)}$$

The major luminosity limitations are

- The number of antiprotons ($BN_{\bar{p}}$)
- The proton beam brightness (N_p/ε_p)
- $F<1$

Luminosity vs. Antiproton Intensity

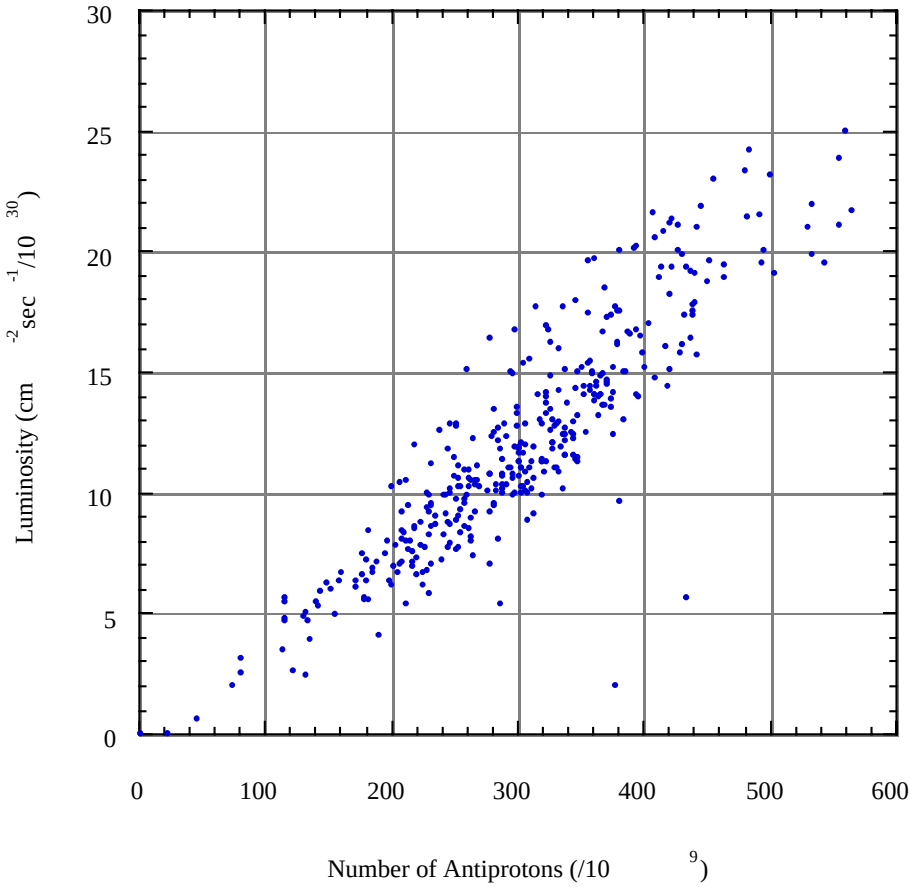

Run II Parameters

RUN	Ib (1993-95) (6x6)	Run IIa (36x36)	Run IIa (140x105)	Run IIb (140x105)	
Protons/bunch	2.3×10^{11}	2.7×10^{11}	2.7×10^{11}	2.7×10^{11}	
Antiprotons/bunch*	5.5×10^{10}	3.0×10^{10}	4.0×10^{10}	1.0×10^{11}	
Total Antiprotons	3.3×10^{11}	1.1×10^{12}	4.2×10^{12}	1.1×10^{13}	
Pbar Production Rate	6.0×10^{10}	1.0×10^{11}	2.1×10^{11}	5.2×10^{11}	hr^{-1}
Proton emittance	23π	20π	20π	20π	mm-mrad
Antiproton emittance	13π	15π	15π	15π	mm-mrad
β^*	35	35	35	35	cm
Energy	900	1000	1000	1000	GeV
Antiproton Bunches	6	36	103	103	
Bunch length (rms)	0.60	0.37	0.37	0.37	m
Crossing Angle	0	0	136	136	μrad
Typical Luminosity	0.16×10^{31}	0.86×10^{32}	2.1×10^{32}	5.2×10^{32}	$cm^{-2}sec^{-1}$
Integrated Luminosity†	3.2	17.3	42	105	pb^{-1}/week
Bunch Spacing	~3500	396	132	132	nsec
Interactions/crossing	2.5	2.3	1.9	4.8	

†The typical luminosity at the beginning of a store has traditionally translated to integrated luminosity with a 33% duty factor. Operation with antiproton recycling may be somewhat different.

More Antiprotons

- More protons on the antiproton target
  - Slip stacking (~1.8 x)
  - Proton beam sweeping
- Better antiproton collection efficiency
  - Liquid lithium lens (~1.5 x)
  - AP2-Debuncher aperture increases (~1.5 x)
- Better cooling
  - Debuncher cooling bandwidth increase
  - Accumulator Stacktail 4-8 GHz bandwidth increase
  - Accumulator Core bandwidth increase
  - Electron cooling in the Recycler

Luminosity Upgrade Schedule

Fiscal Year	Integrated Luminosity (fb-1)	Project	Progress
2001	0.5		
2002	1	Moveable Quads	Debuncher 30 π
		Debuncher BPM	
		Slip Stacking	
2003	1	Electron Cooling	Debuncher 35 π
2004	2	Debuncher Cooling	Debuncher 40 π
		Accumulator Cooling	
		Liquid Lithuium Lens	
2005	2.5		Incremental Improvements - Tuning
2006	3		Incremental Improvements - Tuning
2007	3.5		Incremental Improvements - Tuning

Slip Stacking

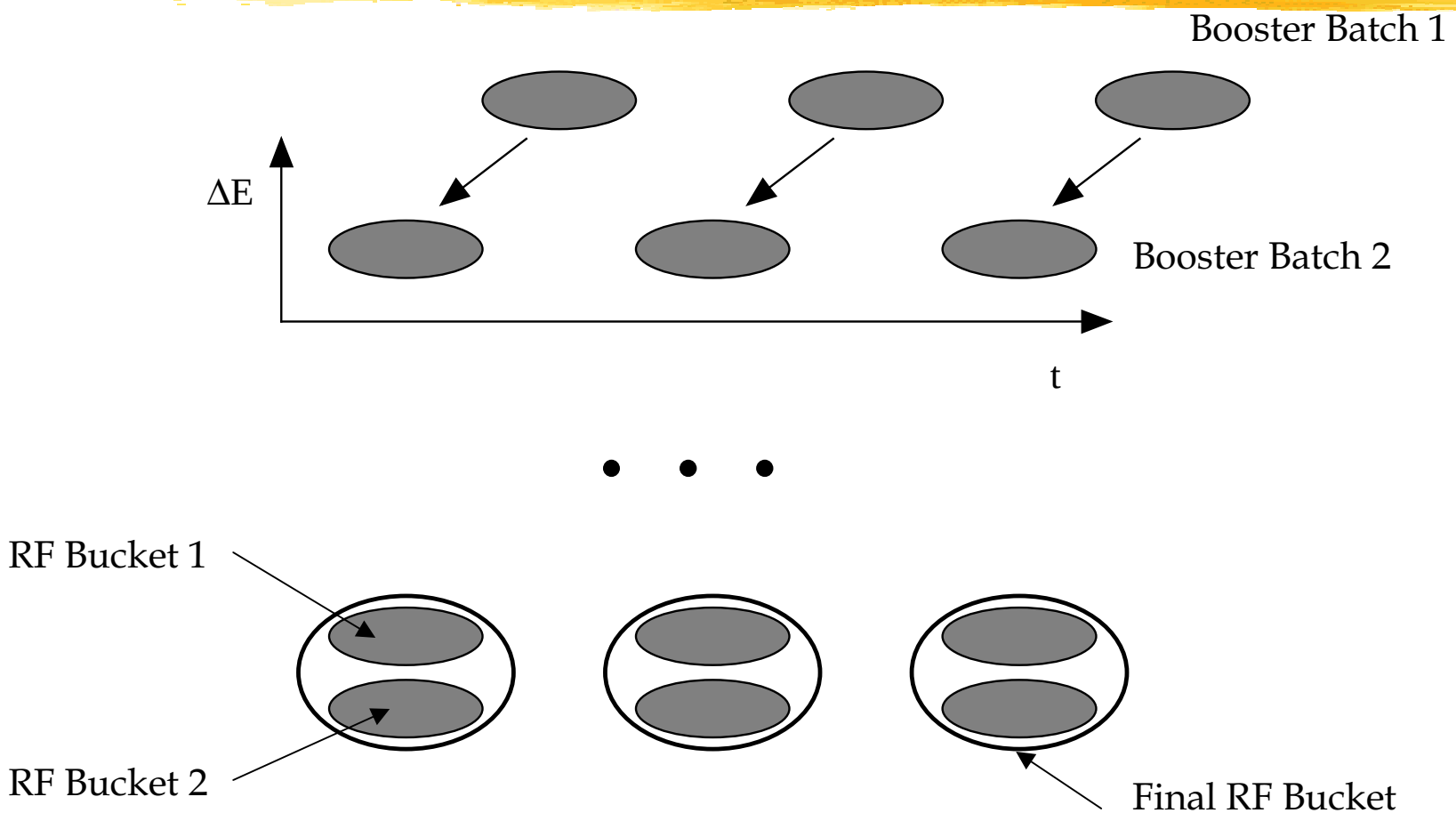

RF Phase Space Cartoon

Slip Stacking

- Increases the number protons on the antiproton target
- Advantages
  - Not a large construction project - mostly RF electronics
  - Takes advantage of the large Main Injector momentum aperture
  - Can be used to increase NUMI intensity
- Disadvantages
  - Requires high gain beam loading compensation
  - Losses in the Main Injector may be higher
- Beam Loading Compensation
  - Present project underway to incorporate direct RF feedback in all 18 Main Injector 53 MHz RF cavities
  - Beam loading compensation will also help:
    - RF Coalescing for the collider
    - Pbar production cycles
      - Injection
      - Transition
      - Bunch Rotation
    - High intensity Fixed Target running (NUMI)

Slip Stacking Experiment in the Main Ring

M:IBEAM=beam current (dc)
M:RFSUML=rf voltage fanback
M:BLM53=beam current at 53 MHz

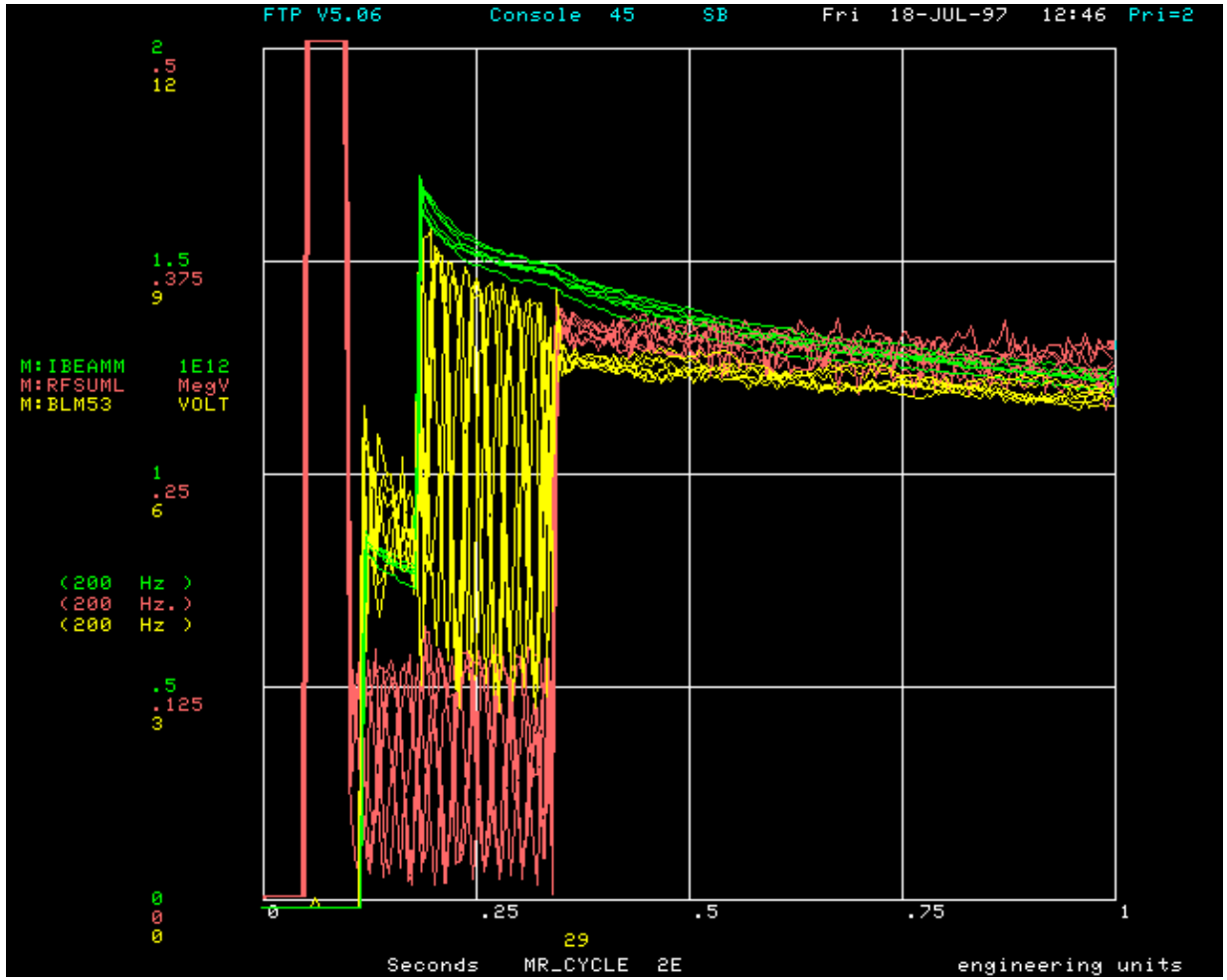

Beam Loading Compensation using Direct RF Feedback

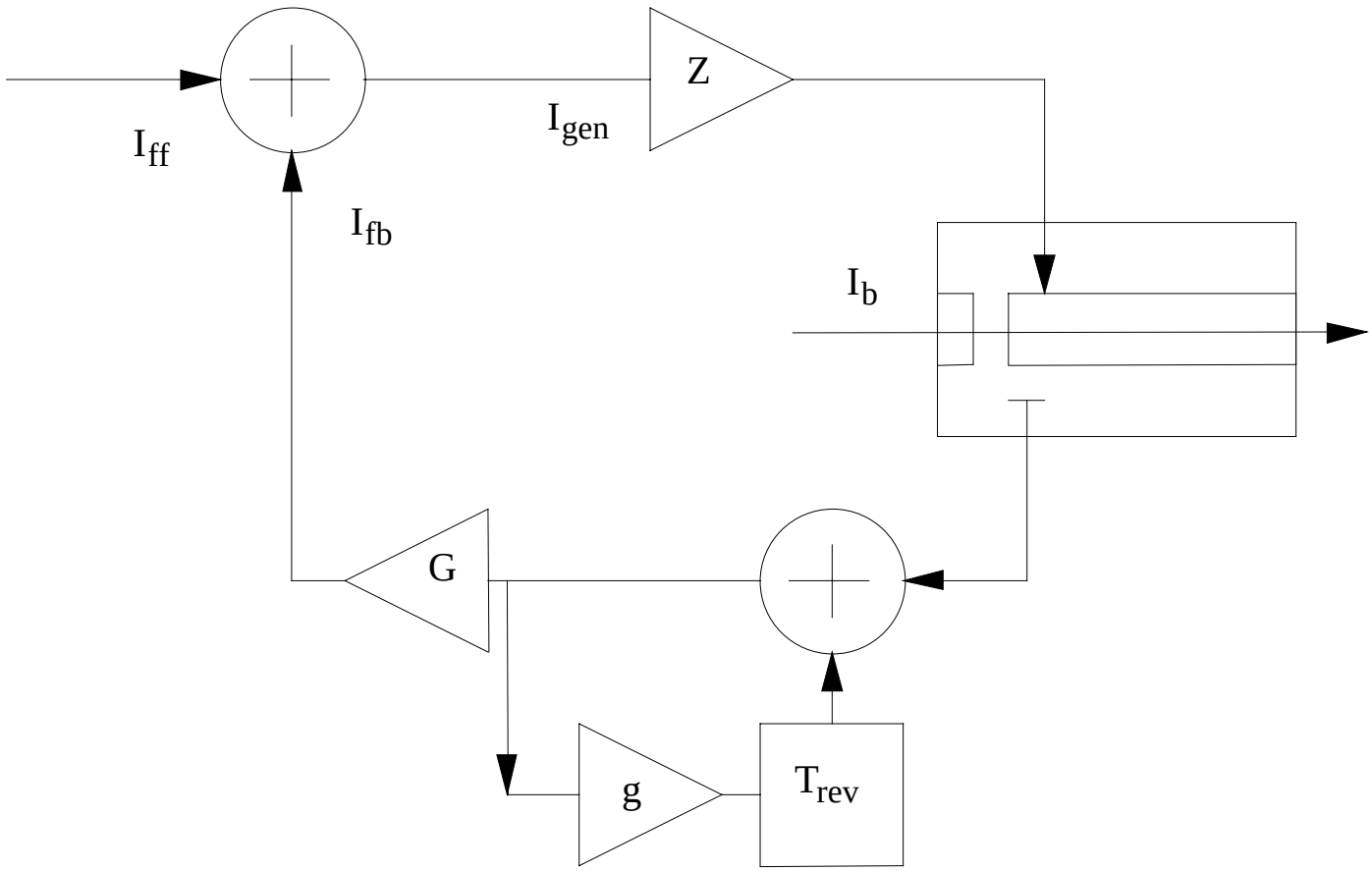

Beam Sweeping at the Antiproton Production Target

- As the intensity of the proton beam on target increases, the peak energy deposition of the proton beam at the target is high enough to damage the target in a single pulse

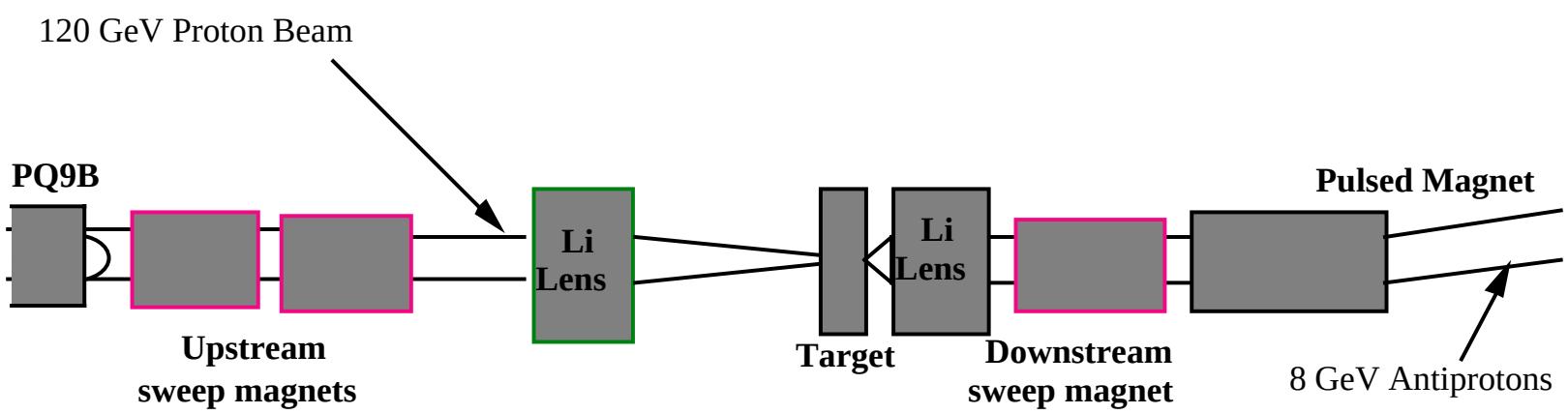

Liquid Lithium Lens

Solid Lens Performance

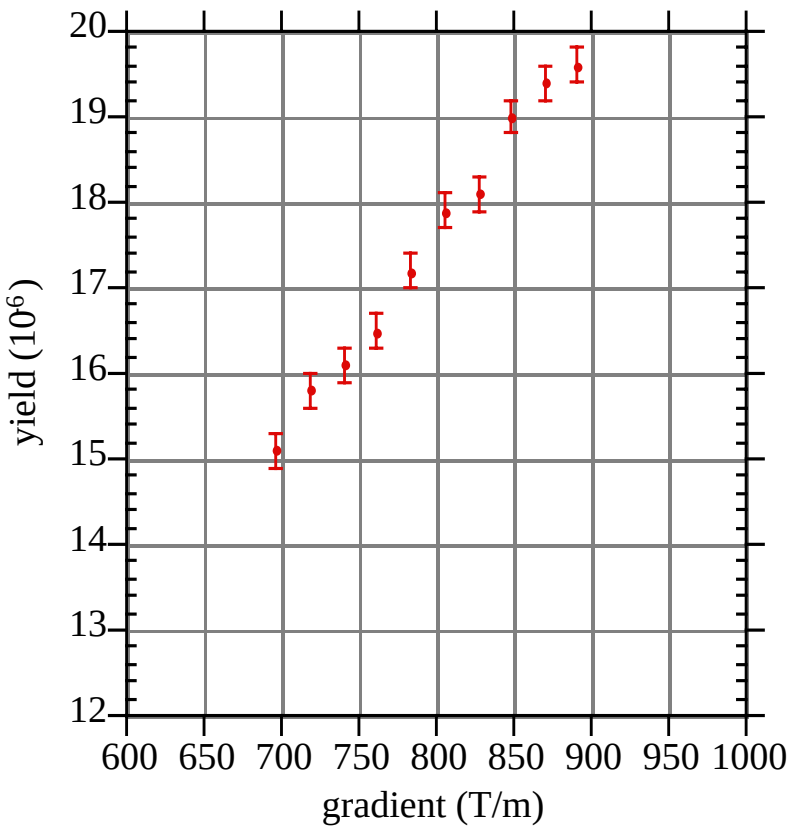

Liquid Lens Predictions

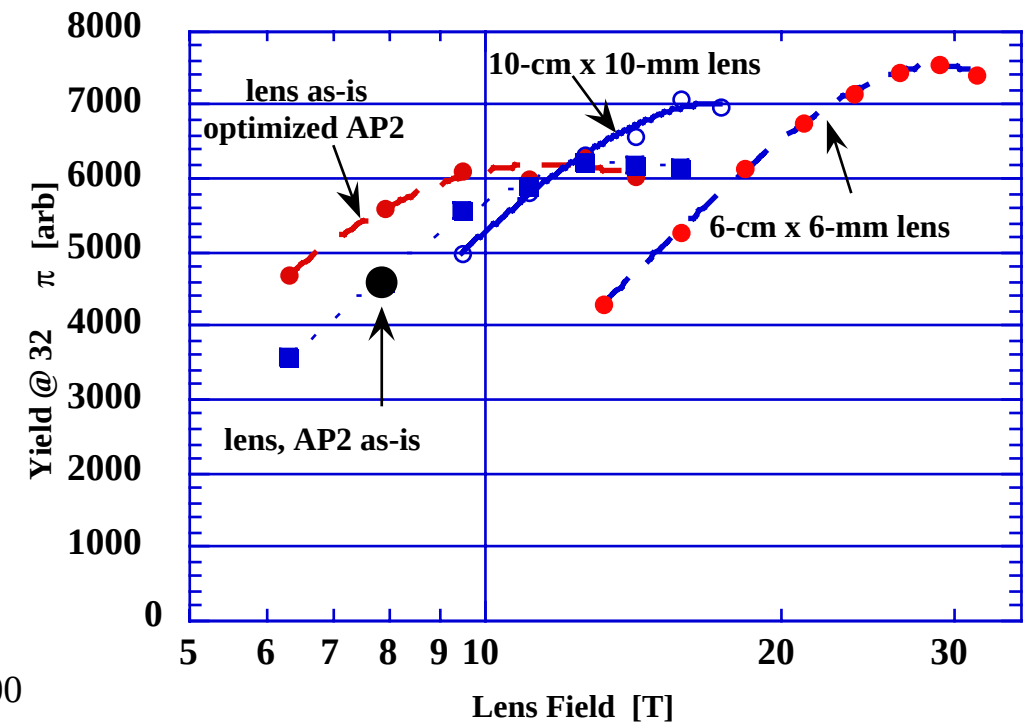

BINP Liquid Lithium Lens Prototype

Antiproton Aperture Increases

- Largest gain if aperture is increased in regions upstream of the first stage of stochastic cooling
  - AP2 transfer line
  - Debuncher
- The goal is to increase the aperture in both planes from 25π mm-mrad to 40 π mm-mrad
- Beam based alignment of all magnetic elements
  - requires new instrumentation
  - motorized quads
- Physical aperture increases
  - such as replacing beam pipe in Debuncher dipoles with curved beam pipe

TEV 1 Antiproton Yield vs. Acceptance

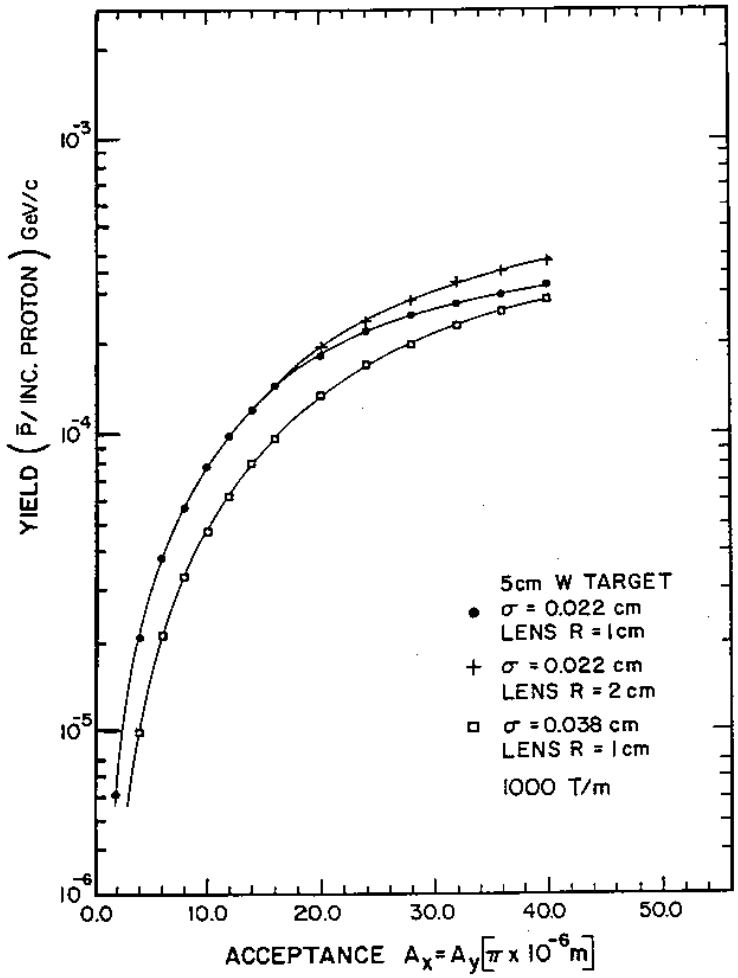

f Debuncher Cooling Cryogenic Multiband Cooling Systems

- Narrow high sensitivity bands for low intensity
- Wide low sensitivity bands for high intensity

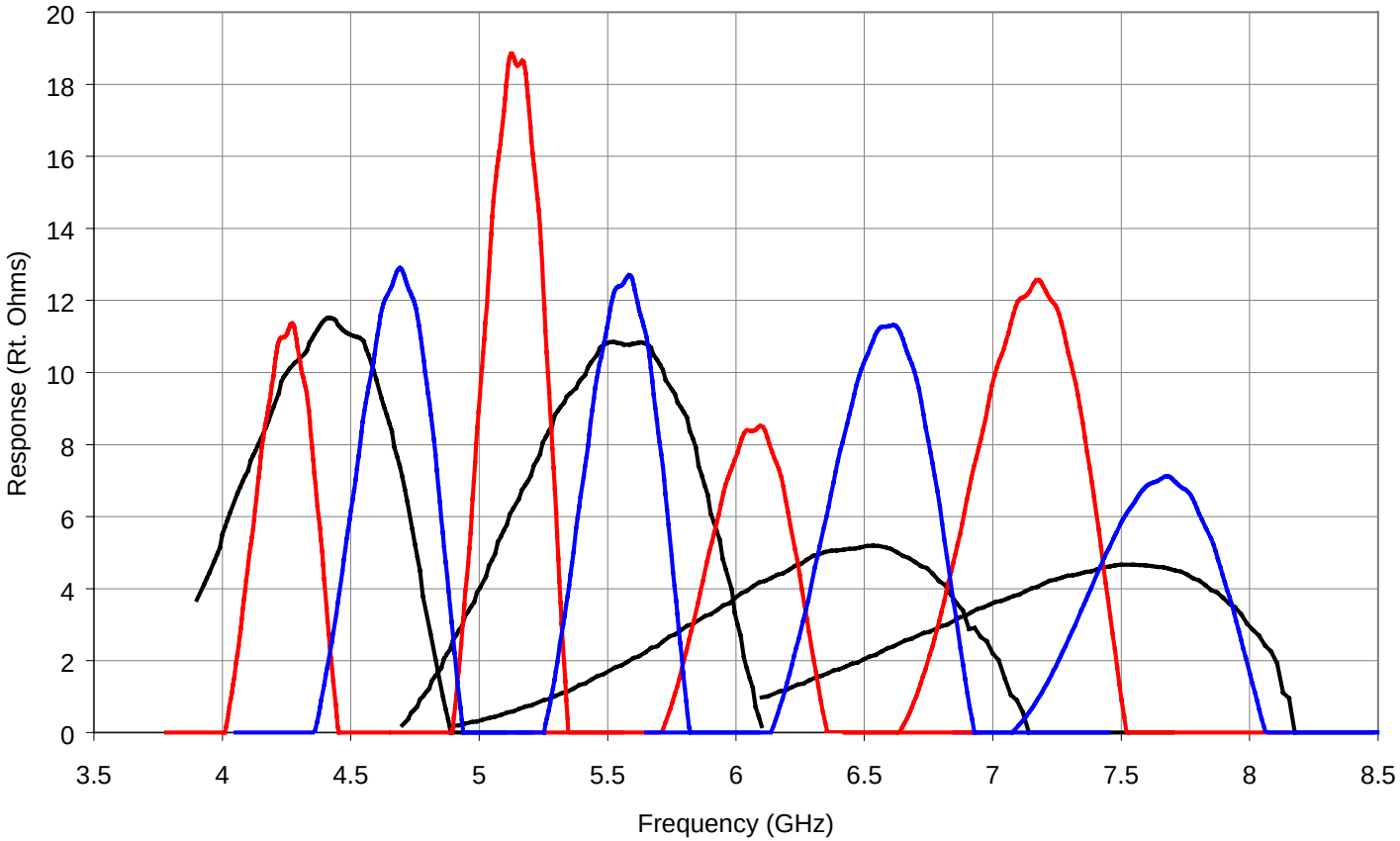

f Accumulator Stochastic Cooling Cooling Bandwidth Increases

- The stacktail system bandwidth was increased from1-2 GHz to 2-4 GHz for Run II
  - The Accumulator slip factor (η) was decreased by a factor of 2 to make the system stable
  - The reduction of η reduces the cooling rate of the core systems by a factor of 2 at high stacks
- Wideband stripline-type electrodes suffer from severe gain slopes at high frequencies (> 6 GHz)
  - Future bandwidth increases above 4 GHz will probably require Debuncher-like multi-band channels
- The Run II Accumulator lattice upgrade will support an increase in the bandwidth of the Accumulator stacktail cooling system from 2-4GHz to 4-8 GHz. This bandwidth is sufficient to accommodate 4x the antiproton flux if the amount of cooling in the Accumulator is reduced

4-8 GHz Accumulator Stack Tail System

- 5.6×10^8 antiprotons/2 sec
- Transfers to the Recycler every few minutes (~5)

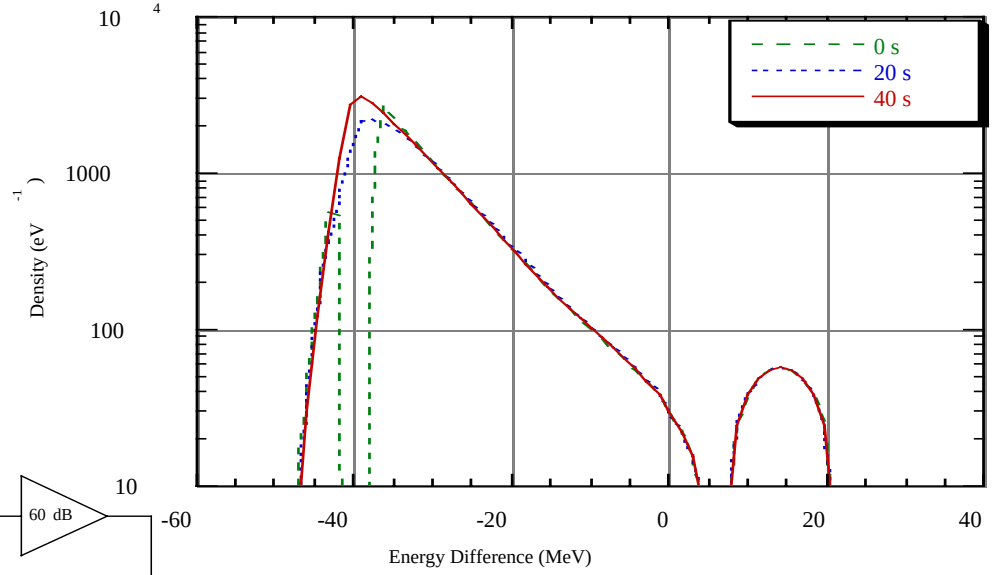

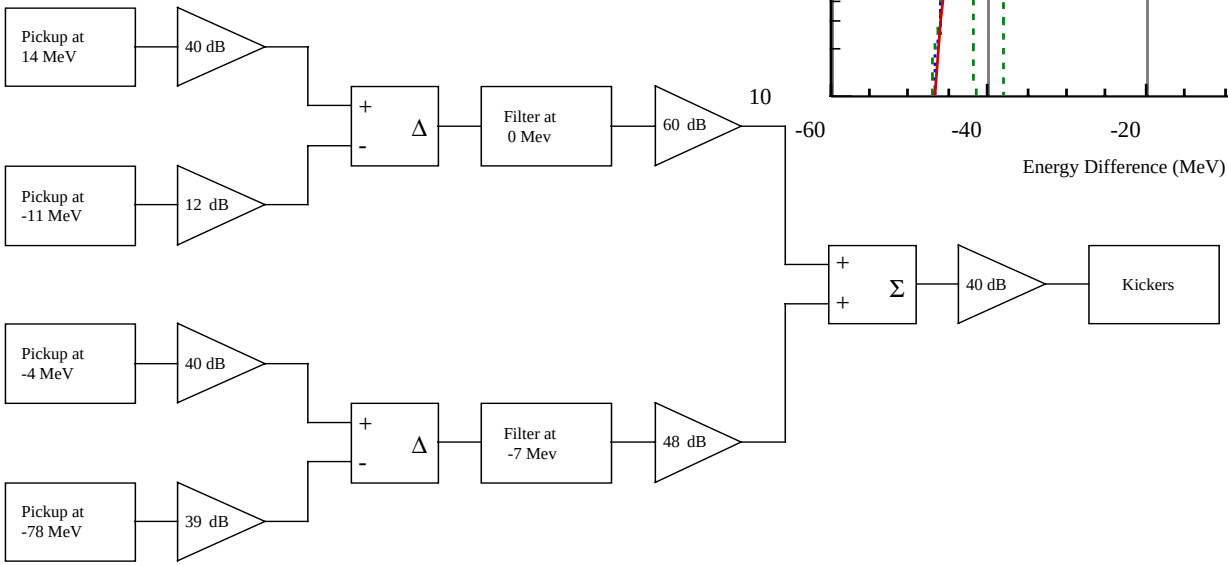

Accumulator to Recycler Beam Transfer (AP-5)

- At the beginning of Run II, the transfers will take place through the AP-1 line, the Main Ring remnant, and the Main Injector. This path is awkward not only because of the indirect route, but because this beam line is also used to transport 120 GeV protons to the production target.
- With 4x the antiproton flux, the reduction of the cooling requirement in the Accumulator implies transfers between the Accumulator and the Recycler about once per minute.
- A dedicated 8 GeV transport line between the Accumulator and Recycler may be essential.

Recycler Electron Cooling

- Stochastic Cooling will be used in the Recycler at the beginning of Run II. It will be replaced with electron cooling.
- Because of the Recycler lattice parameters it is at least very difficult to increase the stochastic cooling system bandwidth.
- Electron cooling will relieve the Accumulator of having to cool the antiproton beam to its ultimate density.
- Electron cooling will make it possible to cool and recycle the high intensity antiproton beams required to approach a luminosity of 10^{33} cm^{-2} sec^{-1}.
- A substantial R&D effort is underway to understand the technology required to achieve cooling of an 8 GeV antiproton beam.

Schematic Layout of Recycler Electron Cooling

Electron Cooling System Parameters

Parameter	Value	Units
Electrostatic Accelerator		
Terminal Voltage	4.3	MV
Electron Beam Current	0.5	A
Terminal Voltage Ripple	500	V (FWHM)
Cathode Radius	2.5	mm
Gun Solenoid Field	200	G
Cooling Section		
Length	20	m
Solenoid Field	50	G
Vacuum Pressure	0.1	nTorr
Electron Beam Radius	6	mm
Electron Beam Divergence	< 80	µrad

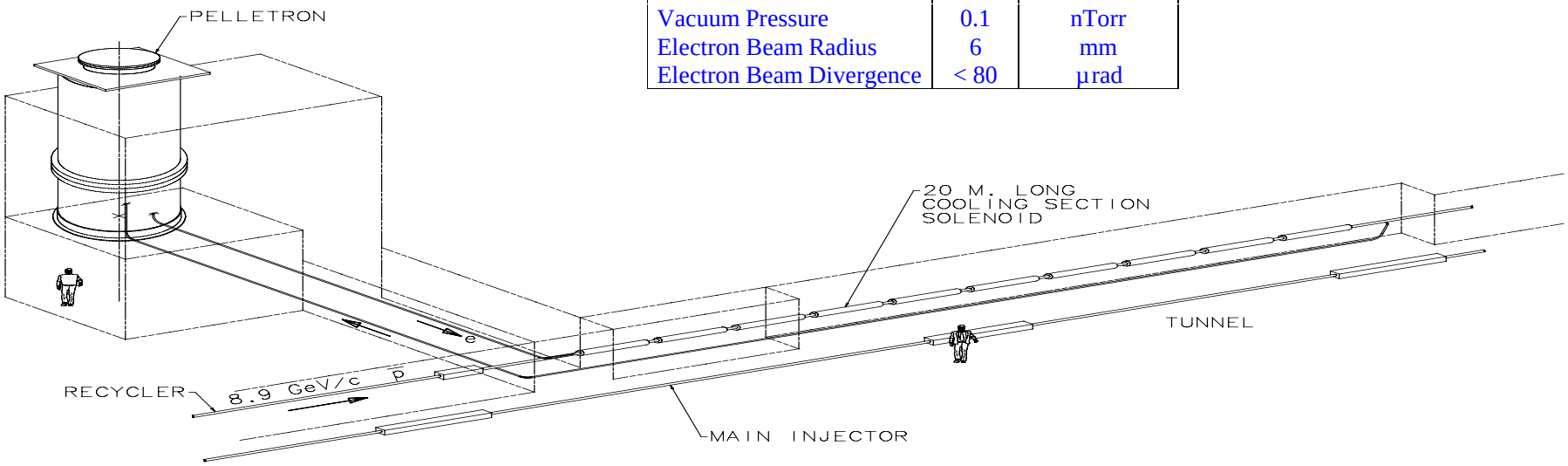

Electron Cooling Proof-of-Principle (Recirculation experiment)

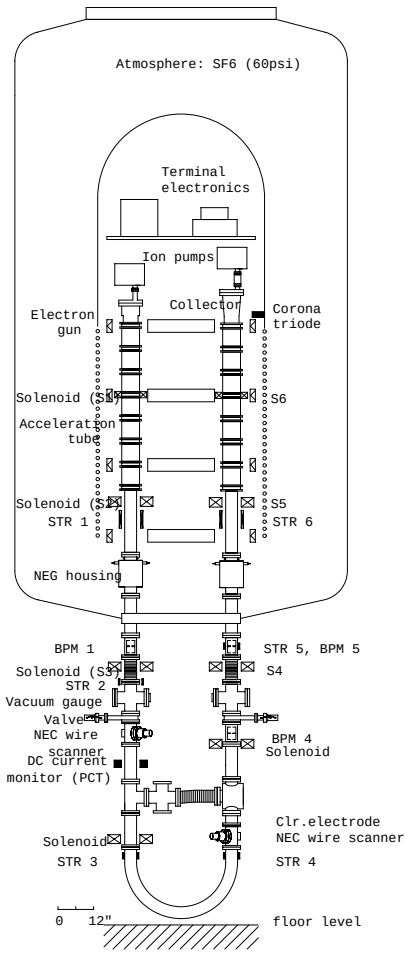

GOAL

- To demonstrate a 0.2 A recirculation for 1 hour using an existing 2 MeV Pelletron at NEC

STATUS

Nov. 95:	project started
Jan. 97:	first recirculated current (10 μA)
May 97:	new gun and collector are installed
Dec. 97:	Max. recirculated current of 0.2 A
May 98:	0.2 A for 1 hour
Sep. 98:	0.2 A for 5 hours
Dec. 98:	Max. recirculated current of 0.7 A
Feb. 99:	5 MeV Pelletron ordered

Beam-Beam Tune Shift Compensation

- The goal of the compensation project is to produce an electron beam whose negative charge will cancel the tune shift produced by the proton beam. The electron beam would be collided with the antiproton beam in a location (F49) remote from the interaction regions.

TEV Layout Cartoon

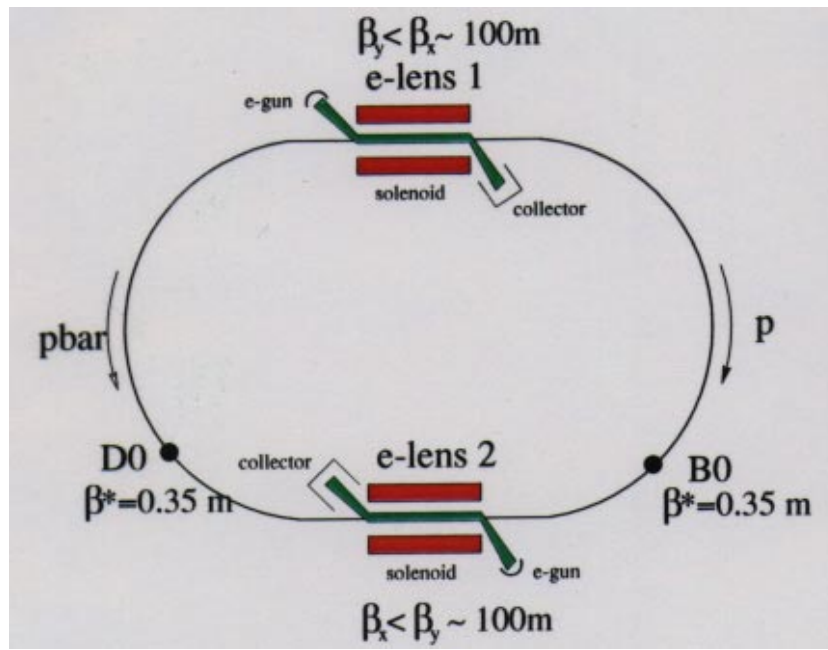

TEVATRON Electron Lens Prototype

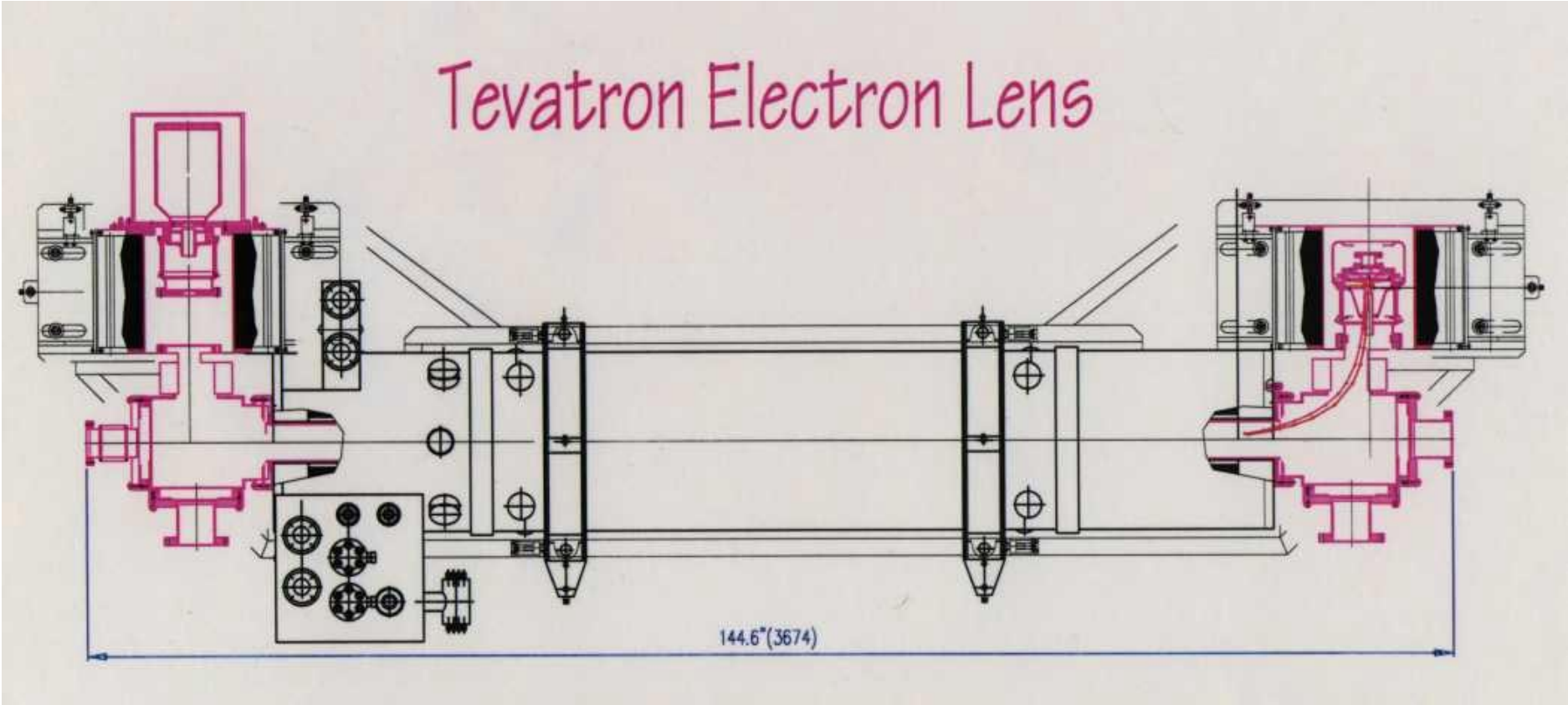

TEVATRON Electron Lens Prototype
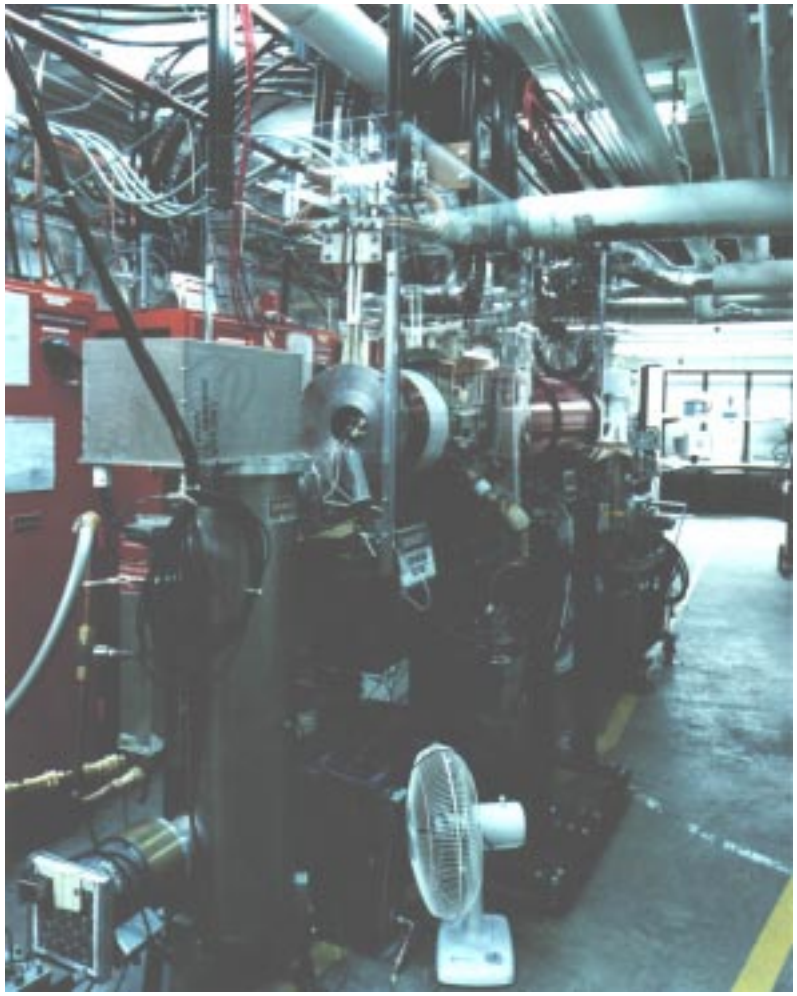
(located in LINAC basement)