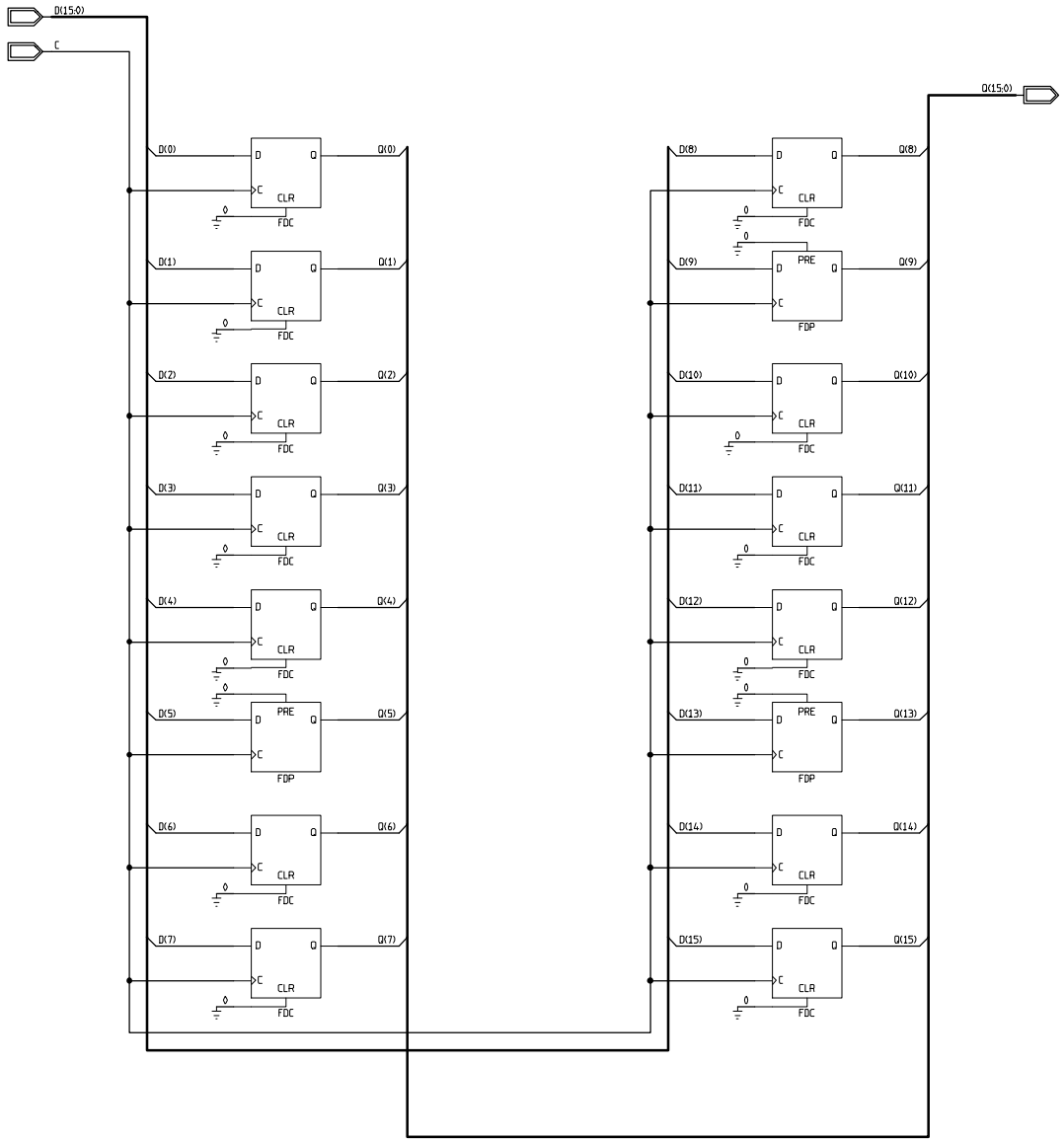

REVISIONS			
REV	DESCRIPTION	DATE	APPROVED

CONTRACT NO.		Fermi National Accelerator Lab
APPROVALS	DATE	Xilinx FPGA TRACER VME Slave Control Register - 16reg
DRAWN		
CHECKED		
ISSUED		SIZE C / FSCM NO. / DWG. NO. TMS-TRAC-012697-CNTRL-A / REV
		SCALE / SHEET

DWG. NO.
SHT.
REV.

H=4ND; V=4LA