# Online monitor for L2 CAL upgrade

Giorgio Cortiana

**Outline:**

- Hardware Monitoring
- New Clusters Monitoring

http://www.pd.infn.it/~cortiana/TrigMonOut/TrigMonOut.html

# Hardware Monitor results:

**All mezzanine firmware has been recently updated. As a results, the error rate has been further reduced.**

**Error rate is reduced of more than a factor 30!**

| Pulsar 00 | Old mezzanine firmware | New mezzanine firmware |
|---|---|---|
| Error rate | $9 \times 10^{-5}$ | $<2 \times 10^{-6}$ |

# How the monitor looks like:

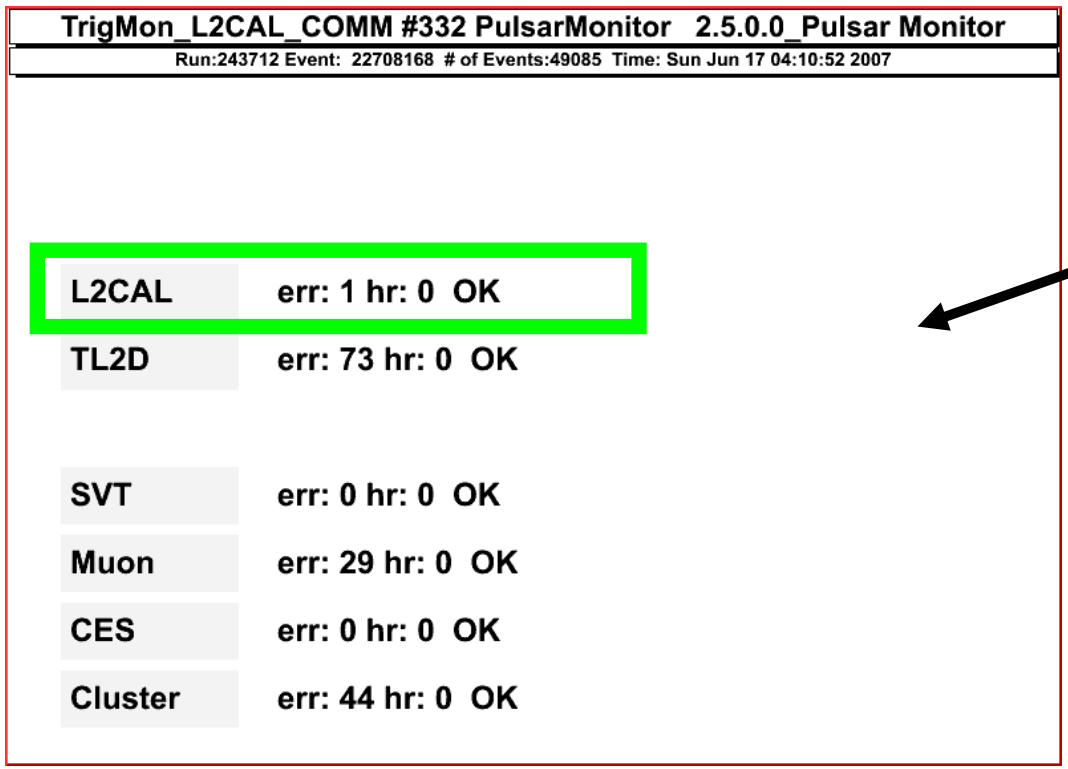


**For each run a global pulsar canvas informs about the system status.**

**The code runs online almost every day, and stays inside the PulsarMon package**

**From this information we can easily find out the location and the kind of error from log files:**

In this case the error is limited to Pulsar 12 and due to ADMEM-DCAS mismatches.

b0gateway - Konsole

```
==============================================================================
Trigger 16405447
Sun Jun 17 00:52:09 2007

Event 16405447, L2CAL Monitor: Pulsar DAQ buffers
                REAL TP2D:              SIM TP2D:       XOR Diff:
******************************************************************************
DAQ: CONTROL_1
      Block 5 board 5 word 0      36832009                abbababe                9d399ab7
      Block 5 board 5 word 1      b0f00000                b0f00000                       0
      Block 5 board 5 word 2       1600024                 1600024                       0
      Block 5 board 5 word 3         d000d                       0                   d000d
      Block 5 board 5 word 4        200002                  200002                       0
      Block 5 board 5 word 5        200404                  200404                       0
      Block 5 board 5 word 6           403                     403                       0
      Block 5 board 5 word 7          1000                    1000                       0
      Block 5 board 5 word 8        500001                  500001                       0
      Block 5 board 5 word 9           800                       0                     800
      Block 5 board 5 word 10       b00000                  b00000                       0
      Block 5 board 5 word 11       100805                  100805                       0
      Block 5 board 5 word 12      1200009                       0                 1200009
      Block 5 board 5 word 13       200800                  200800
      Block 5 board 5 word 14          804                     804
      Block 5 board 5 word 15       200004                  200000
      Block 5 board 5 word 16       200800                  200800
      Block 5 board 5 word 17       700402                  700402
      Block 5 board 5 word 18       101800                  101800
      Block 5 board 5 word 19       300405                  300405
      Block 5 board 5 word 20       200c01                  200c01
      Block 5 board 5 word 21       100803                  100803
      Block 5 board 5 word 22       300400                  300400
      Block 5 board 5 word 23       c00c02                  c00c02
      Block 5 board 5 word 24          801                     801
      Block 5 board 5 word 25            0                       0
      Block 5 board 5 word 26       16eeee                  16eeee
      Block 5 board 5 word 27     e0f00000                e0f00000
******************************************************************************
:
```

New b0gateway b0gateway b0gateway

TrigMon_L2CAL_COMM #332 PulsarMonitor 2.5

Run:243712 Event: 22708168 # of Events 49085 Time: Sun Ju

| | |
|---|---|
| L2CAL | err: 1 hr: 0 OK |
| TL2D | err: 73 hr: 0 OK |

b0gateway - Konsole

```
******************************************************************************
DAQ: DATAIO1_1
      Block 5 board 5 word 0          2                       2                       0
      Block 5 board 5 word 1     101002                  101002                       0
      Block 5 board 5 word 2     200801                  200801                       0
      Block 5 board 5 word 3     300403                  300403                       0
      Block 5 board 5 word 4     400000                  400000                       0
      Block 5 board 5 word 5     500004                  500004                       0
      Block 5 board 5 word 6     600001                  600001                       0
      Block 5 board 5 word 7     700005                  700005                       0
      Block 5 board 5 word 8          2                       0                       2
      Block 5 board 5 word 9     100000                  100000                       0
      Block 5 board 5 word 10     20140b                  20140b                       0
      Block 5 board 5 word 11     300402                  300402                       0
      Block 5 board 5 word 12     400009                  400000                       9
      Block 5 board 5 word 13     500012                  500000                      12
      Block 5 board 5 word 14     600802                  600802                       0
      Block 5 board 5 word 15     700804                  700804                       0
******************************************************************************
DAQ: DATAIO2_1
      Block 5 board 5 word 0          4                       0                       4
      Block 5 board 5 word 1     100002                  100002                       0
      Block 5 board 5 word 2     200802                  200802                       0
      Block 5 board 5 word 3     300402                  300402                       0
      Block 5 board 5 word 4     400007                  400007                       0
      Block 5 board 5 word 5     500406                  500406                       0
      Block 5 board 5 word 6     600405                  600405                       0
      Block 5 board 5 word 7     700403                  700403                       0
      Block 5 board 5 word 8        803                     803                       0
      Block 5 board 5 word 9     100803                  100803                       0
      Block 5 board 5 word 10     200001                  200001                       0
      Block 5 board 5 word 11     300c01                  300c01                       0
      Block 5 board 5 word 12     400c02                  400c02                       0
      Block 5 board 5 word 13     50040c                  50040c                       0
      Block 5 board 5 word 14     600002                  600002                       0
      Block 5 board 5 word 15     700000                  700000                       0
Trigger 16405447 : ADMEM-DCAS energy mismatch:  0 2. tower (phi,eta) = 16 12, word 8
Trigger 16405447 : ADMEM-DCAS energy mismatch:  0 9. tower (phi,eta) = 16 14, word 12
Trigger 16405447 : ADMEM-DCAS energy mismatch:  0 18. tower (phi,eta) = 16 15, word 13
Trigger 16405447 : ADMEM-DCAS energy mismatch:  0 4. tower (phi,eta) = 16 16, word 0
L2CAL_Monitor: processed  49085 events, of which 1 with errors (1 ADMEM-DCAS mis-match)
(END)
```

New b0gateway b0gateway b0gateway

# Hardware Monitor:
# results from online running over the week end:

**Follows a summary report of the online monitor during last week-end.**
**All this is after the mezzanine firmware upgrade:**

**Analyzed runs:**
**243711, 243712,**
**243713, 243715,**
**243730, 243732**

**Plots and tables will refer to all this runs…**

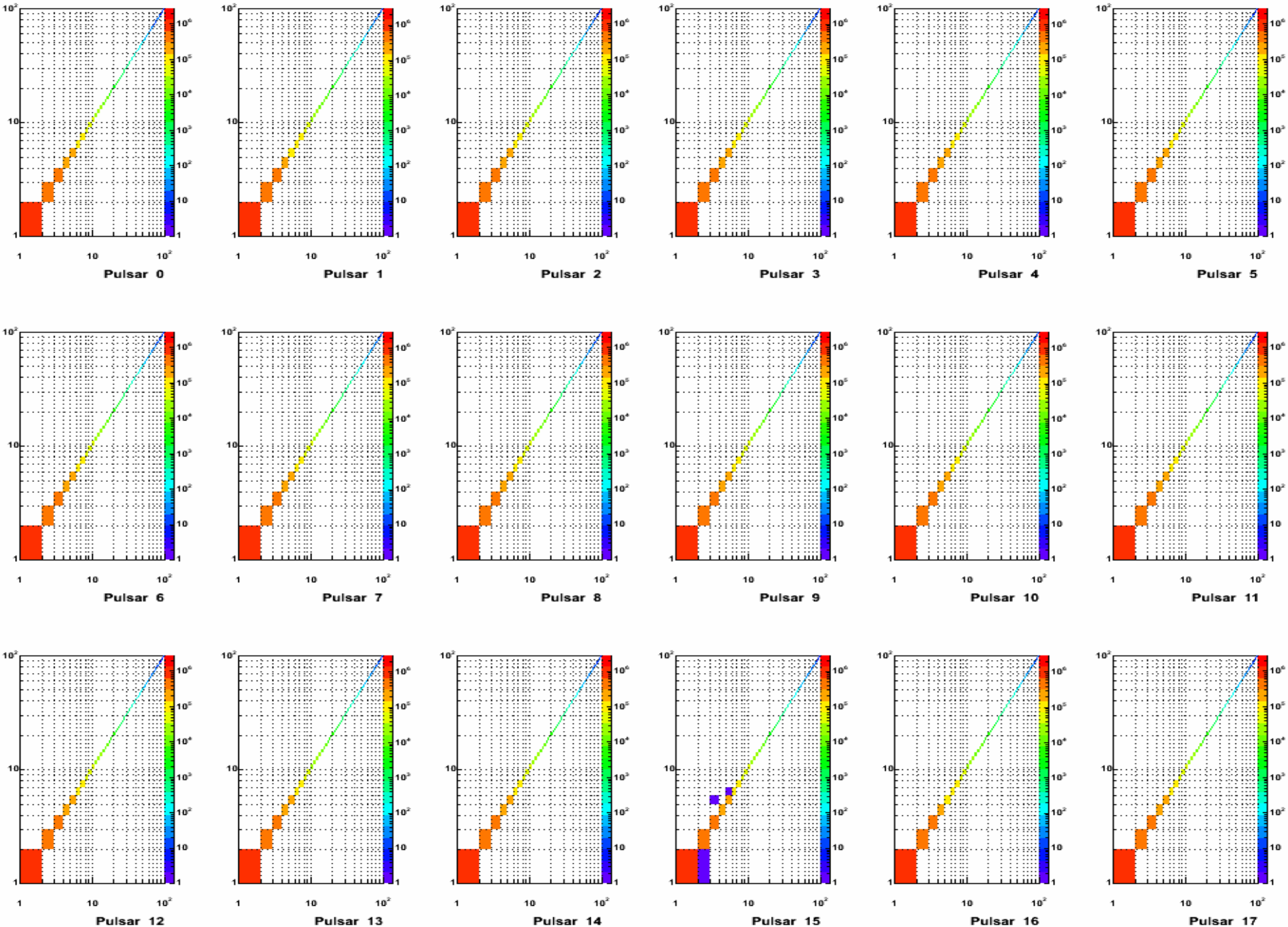
Pulsar 0
Pulsar 1
Pulsar 2
Pulsar 3
Pulsar 4
Pulsar 5
Pulsar 6
Pulsar 7
Pulsar 8
Pulsar 9
Pulsar 10
Pulsar 11
Pulsar 12
Pulsar 13
Pulsar 14
Pulsar 15
Pulsar 16
Pulsar 17

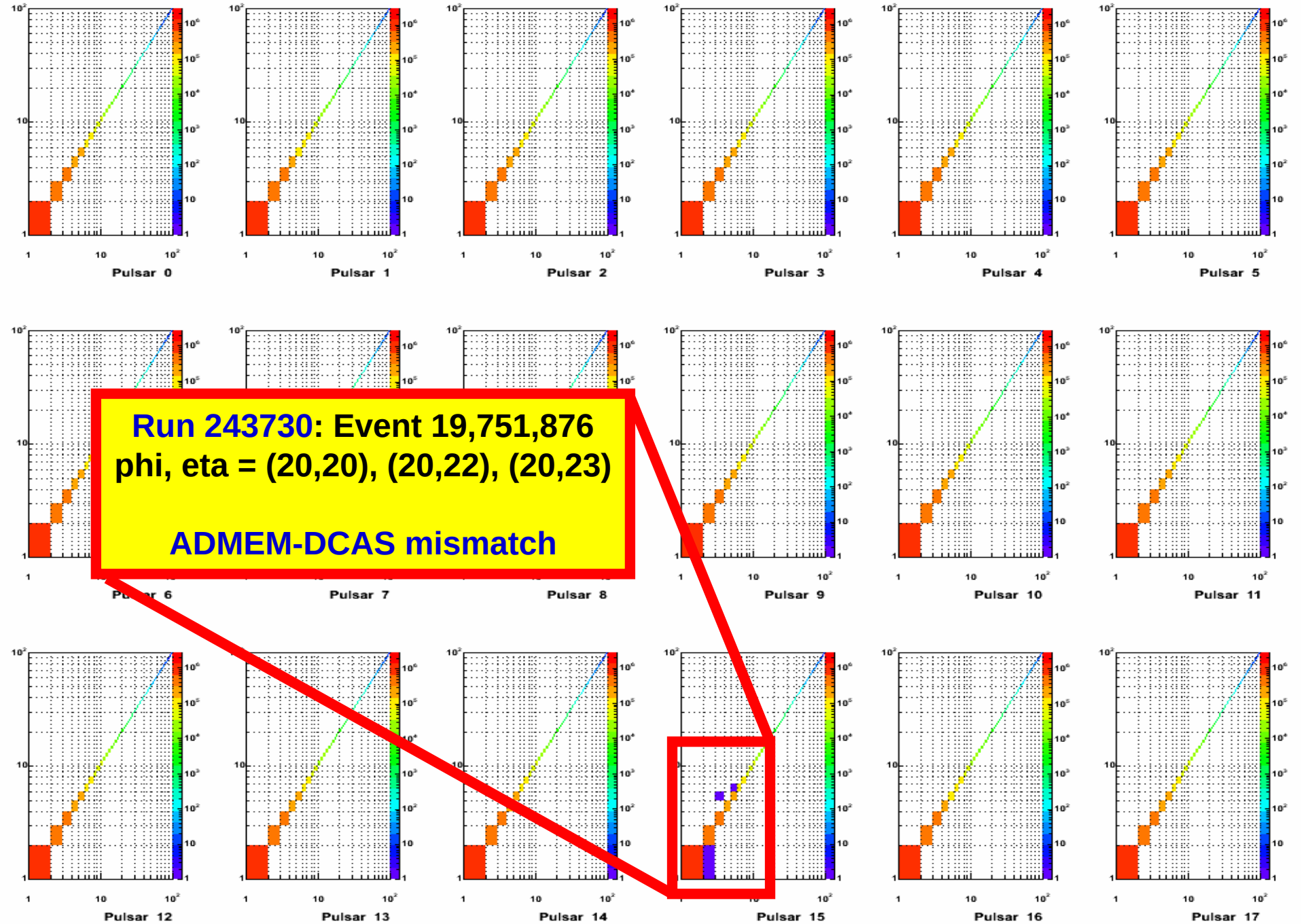
Pulsar 0
Pulsar 1
Pulsar 2
Pulsar 3
Pulsar 4
Pulsar 5
Pulsar 6
Pulsar 7
Pulsar 8
Pulsar 9
Pulsar 10
Pulsar 11
Pulsar 12
Pulsar 13
Pulsar 14
Pulsar 15
Pulsar 16
Pulsar 17
Run 243730: Event 19,751,876
phi, eta = (20,20), (20,22), (20,23)
ADMEM-DCAS mismatch

# Hardware Monitor:
# results from online running over the week end:

Analyzed runs:
243711, 243712,
243713, **243715,**
**243730**, 243732

DCAS connector
tower phi,eta = 4,0

Shell No. 2 - Konsole

L2CAL monitoring summary

| LVDS Pulsar | Tot error | ADMEM-DCAS mismatch | evts | err.rate |
|---|---|---|---|---|
| 0 | 0 | 0 | 169675 | 0.00 x10^-0 |
| 1 | 0 | 0 | 169675 | 0.00 x10^-0 |
| 2 | 0 | 0 | 169675 | 0.00 x10^-0 |
| 3 | 0 | 55948 | 169675 | 0.00 x10^-0 |
| 4 | 0 | 0 | 169675 | 0.00 x10^-0 |
| 5 | 0 | 0 | 169675 | 0.00 x10^-0 |
| 6 | 0 | 0 | 169675 | 0.00 x10^-0 |
| 7 | 0 | 0 | 169675 | 0.00 x10^-0 |
| 8 | 0 | 0 | 169675 | 0.00 x10^-0 |
| 9 | 0 | 0 | 169675 | 0.00 x10^-0 |
| 10 | 0 | 0 | 169675 | 0.00 x10^-0 |
| 11 | 0 | 0 | 169675 | 0.00 x10^-0 |
| 12 | 2 | 2 | 169675 | 1.18 x10^-5 |
| 13 | 0 | 0 | 169675 | 0.00 x10^-0 |
| 14 | 0 | 0 | 169675 | 0.00 x10^-0 |
| 15 | 1 | 1 | 169675 | 5.89 x10^-6 |
| 16 | 0 | 0 | 169675 | 0.00 x10^-0 |
| 17 | 63 | 0 | 169675 | 3.71 x10^-4 |

New Shell Shell No. 2

# Hardware Monitor:
# results from online running over the week end:

Analyzed runs:
243711, 243712,
243713, **243715,**
**243730,** 243732

Shell No. 2 - Konsole

L2CAL monitoring summary

| LVDS Pulsar | Tot error | ADMEM-DCAS mismatch | evts | err.rate |
|---|---|---|---|---|
| 0 | 0 | 0 | 169675 | 0.00 x10^-0 |
| 1 | 0 | 0 | 169675 | 0.00 x10^-0 |
| 2 | 0 | 0 | 169675 | 0.00 x10^-0 |
| 3 | 0 | 55948 | 169675 | 0.00 x10^-0 |
| 4 | 0 | 0 | 169675 | 0.00 x10^-0 |
| 5 | 0 | 0 | 169675 | 0.00 x10^-0 |
| 6 | 0 | 0 | 169675 | 0.00 x10^-0 |
| 7 | 0 | 0 | 169675 | 0.00 x10^-0 |
| 8 | 0 | 0 | 169675 | 0.00 x10^-0 |
| 9 | 0 | 0 | 169675 | 0.00 x10^-0 |
| 10 | | | | -0 |
| 11 | | | | -0 |
| 12 | | | | -5 |
| | | | | -0 |
| | 0 | 0 | 169675 | 0.00 x10^-0 |
| | 1 | 1 | 169675 | 5.89 x10^-6 |
| | 0 | 0 | 169675 | 0.00 x10^-0 |
| | 63 | 0 | 169675 | 3.71 x10^-4 |

No. 2

DCAS connector
tower phi,eta = 4,0

**Problem solved by**
**Changing the connection cable**

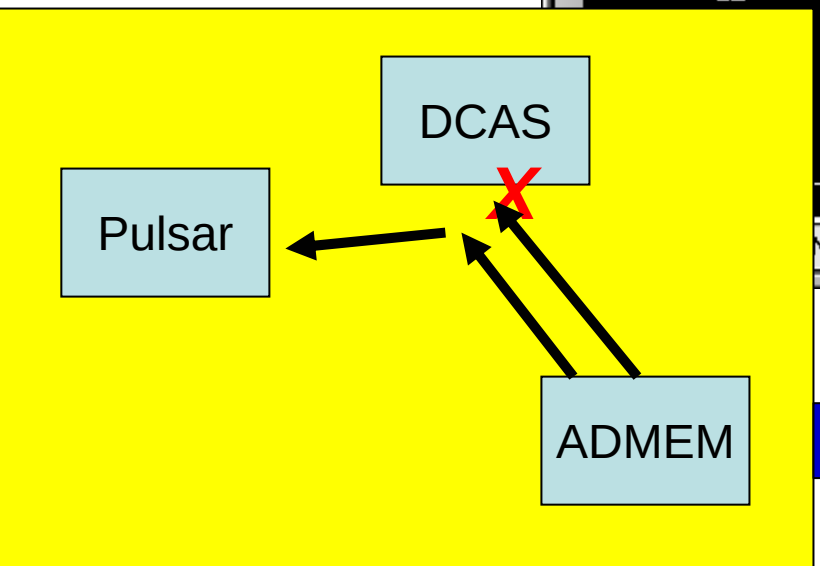


ADMEM-Pulsars OK
ADMEM-DCAS BAD

# Hardware Monitor:
# results from online running over the week end:

Analyzed runs:
243711, **243712**,
243713, **243715**,
**243730**, 243732

Shell No. 2 - Konsole

L2CAL monitoring summary

| LVDS Pulsar | Tot error | ADMEM-DCAS mismatch | evts | err.rate |
|---|---|---|---|---|
| 0 | 0 | 0 | 169675 | 0.00 x10^-0 |
| 1 | 0 | 0 | 169675 | 0.00 x10^-0 |
| 2 | 0 | 0 | 169675 | 0.00 x10^-0 |
| 3 | 0 | 55948 | 169675 | 0.00 x10^-0 |
| 4 | 0 | 0 | 169675 | 0.00 x10^-0 |
| 5 | 0 | 0 | 169675 | 0.00 x10^-0 |
| 6 | 0 | 0 | 169675 | 0.00 x10^-0 |
| 7 | 0 | 0 | 169675 | 0.00 x10^-0 |
| 8 | 0 | 0 | 169675 | 0.00 x10^-0 |
| 9 | 0 | 0 | 169675 | 0.00 x10^-0 |
| 10 | 0 | 0 | 169675 | 0.00 x10^-0 |
| 11 | 0 | 0 | 169675 | 0.00 x10^-0 |
| 12 | 2 | 2 | 169675 | 1.18 x10^-5 |
| 13 | 0 | 0 | 169675 | 0.00 x10^-0 |
| 14 | 0 | 0 | 169675 | 0.00 x10^-0 |
| 15 | 1 | 1 | 169675 | 5.89 x10^-6 |
| 16 | 0 | 0 | 169675 | 0.00 x10^-0 |
| 17 | 63 | 0 | 169675 | 3.71 x10^-4 |

New Shell Shell No. 2

DCAS connectors
tower phi,eta = 4,0

ADMEM-DCAS mis-matches

# Hardware Monitor:
# results from online running over the week end:

Analyzed runs:
243711, **243712,**
243713, **243715**,
**243730**, 243732

Shell No. 2 - Konsole

L2CAL monitoring summary

| LVDS Pulsar | Tot error | ADMEM-DCAS mismatch | evts | err.rate |
|---|---|---|---|---|
| 0 | 0 | 0 | 169675 | 0.00 x10^-0 |
| 1 | 0 | 0 | 169675 | 0.00 x10^-0 |
| 2 | 0 | 0 | 169675 | 0.00 x10^-0 |
| 3 | 0 | 55948 | 169675 | 0.00 x10^-0 |
| 4 | 0 | 0 | 169675 | 0.00 x10^-0 |
| 5 | 0 | 0 | 169675 | 0.00 x10^-0 |
| 6 | 0 | 0 | 169675 | 0.00 x10^-0 |
| 7 | 0 | 0 | 169675 | 0.00 x10^-0 |
| 8 | 0 | 0 | 169675 | 0.00 x10^-0 |
| 9 | 0 | 0 | 169675 | 0.00 x10^-0 |
| 10 | 0 | 0 | 169675 | 0.00 x10^-0 |
| 11 | 0 | 0 | 169675 | 0.00 x10^-0 |
| 12 | 2 | 2 | 169675 | 1.18 x10^-5 |
| | 0 | 0 | 169675 | 0.00 x10^-0 |
| | 0 | 0 | 169675 | 0.00 x10^-0 |
| | 1 | 1 | 169675 | 5.89 x10^-6 |
| | 0 | 0 | 169675 | 0.00 x10^-0 |
| | 63 | 0 | 169675 | 3.71 x10^-4 |

No. 2

DCAS connectors
tower phi,eta = 4,0

ADMEM-DCAS mis-matches

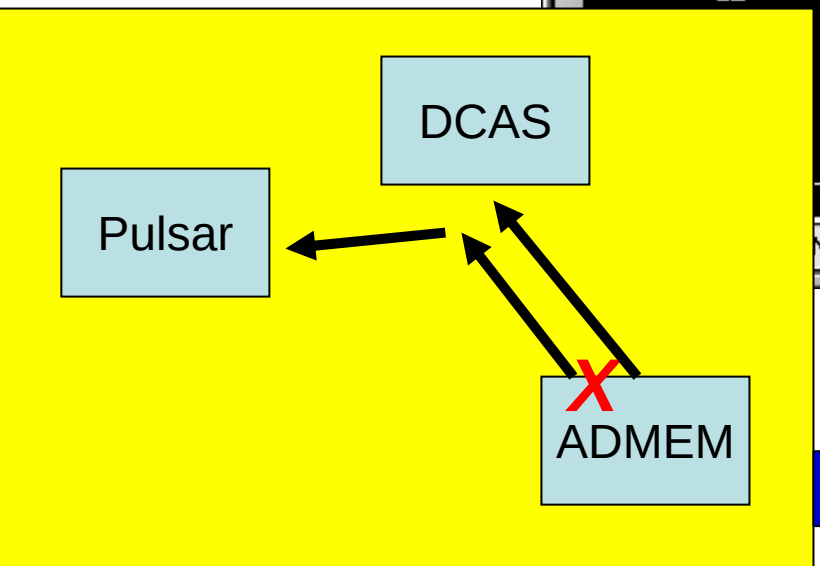


ADMEM-Pulsars BAD
ADMEM-DCAS BAD

# Hardware Monitor:
# results from online running over the week end:

Analyzed runs:
243711, 243712,
243713, **243715**,
**243730, 243732**

Shell No. 2 - Konsole

L2CAL monitoring summary

| LVDS Pulsar | Tot error | ADMEM-DCAS mismatch | evts | err.rate |
|---|---|---|---|---|
| 0 | 0 | 0 | 169675 | 0.00 x10^-0 |
| 1 | 0 | 0 | 169675 | 0.00 x10^-0 |
| 2 | 0 | 0 | 169675 | 0.00 x10^-0 |
| 3 | 0 | 55948 | 169675 | 0.00 x10^-0 |
| 4 | 0 | 0 | 169675 | 0.00 x10^-0 |
| 5 | 0 | 0 | 169675 | 0.00 x10^-0 |
| 6 | 0 | 0 | 169675 | 0.00 x10^-0 |
| 7 | 0 | 0 | 169675 | 0.00 x10^-0 |
| 8 | 0 | 0 | 169675 | 0.00 x10^-0 |
| 9 | 0 | 0 | 169675 | 0.00 x10^-0 |
| 10 | 0 | 0 | 169675 | 0.00 x10^-0 |
| 11 | 0 | 0 | 169675 | 0.00 x10^-0 |
| 12 | 2 | 2 | 169675 | 1.18 x10^-5 |
| 13 | 0 | 0 | 169675 | 0.00 x10^-0 |
| 14 | 0 | 0 | 169675 | 0.00 x10^-0 |
| 15 | 1 | 1 | 169675 | 5.89 x10^-6 |
| 16 | 0 | 0 | 169675 | 0.00 x10^-0 |
| 17 | 63 | 0 | 169675 | 3.71 x10^-4 |

New Shell Shell No. 2

DCAS connectors
tower phi,eta = 4,0

Control DAQ buffer problem
From run 243715, 243730, 243732
**Replaced problematic board.**

ADMEM-DCAS mis-matches

# Hardware Monitor: current results

TrigMon_L2CAL_COMM #332 PulsarMonitor 2.5.0.0_Pulsar Monitor

Run:243787 Event: 10066248 # of Events:24946 Time: Tue Jun 19 08:37:35 2007

| | |
|---|---|
| L2CAL | err: 0 hr: 0 OK |
| TL2D | err: 19 hr: 0 OK |
| SVT | err: 0 hr: 0 OK |
| Muon | err: 5 hr: 0 OK |
| CES | err: 0 hr: 0 OK |
| Cluster | err: 14 hr: 0 OK |

**All hardware problems found during the week end are now solved as demonstrated by the preliminary online monitor results on the current run 243787**

# Clustering algorithm monitor:

- We have all the tools to do a massive debugging of the new clustering algorithm.

- Follows some plots produced on runs
  - 243715 (which has a large number of ADMEM-DCAS mismatches),
  - 243787 (from this night)

  for these runs the TL2D bank contains new clusters information.

- All the code is ready for online running,
  and stays inside the L2GlobalTrigger package.

- What we do is essentially to create a simTL2D bank based on DCAS bank and to run the “same” algorithm as the L2CPU.

- Up to now, we have a qualitative agreement between simulation and data. We are investigating the sources of the discrepancies.

# Clustering algorithm monitor: Pass2 run 243715:

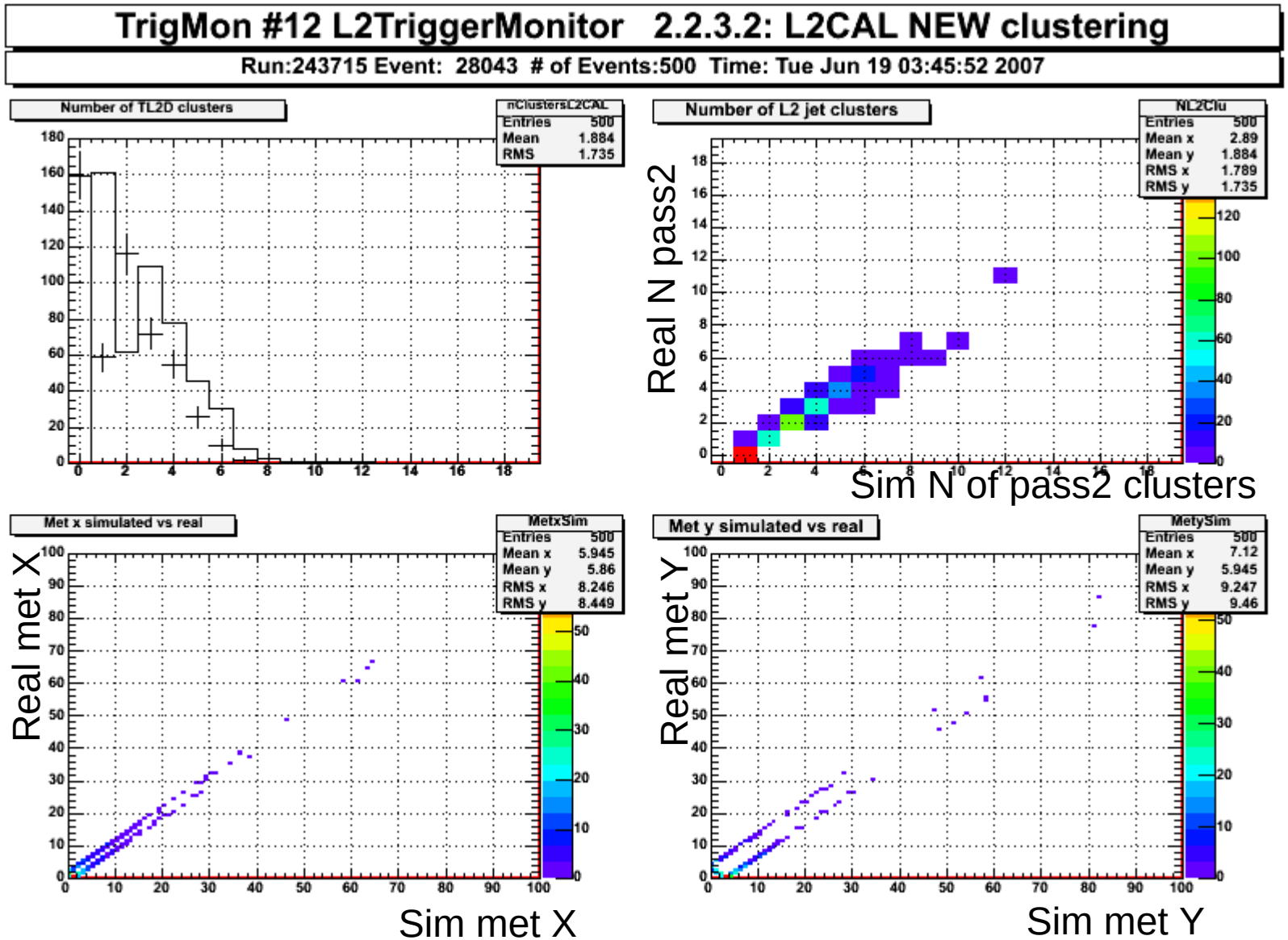

# Clustering algorithm monitor: Pass2 run 243715:

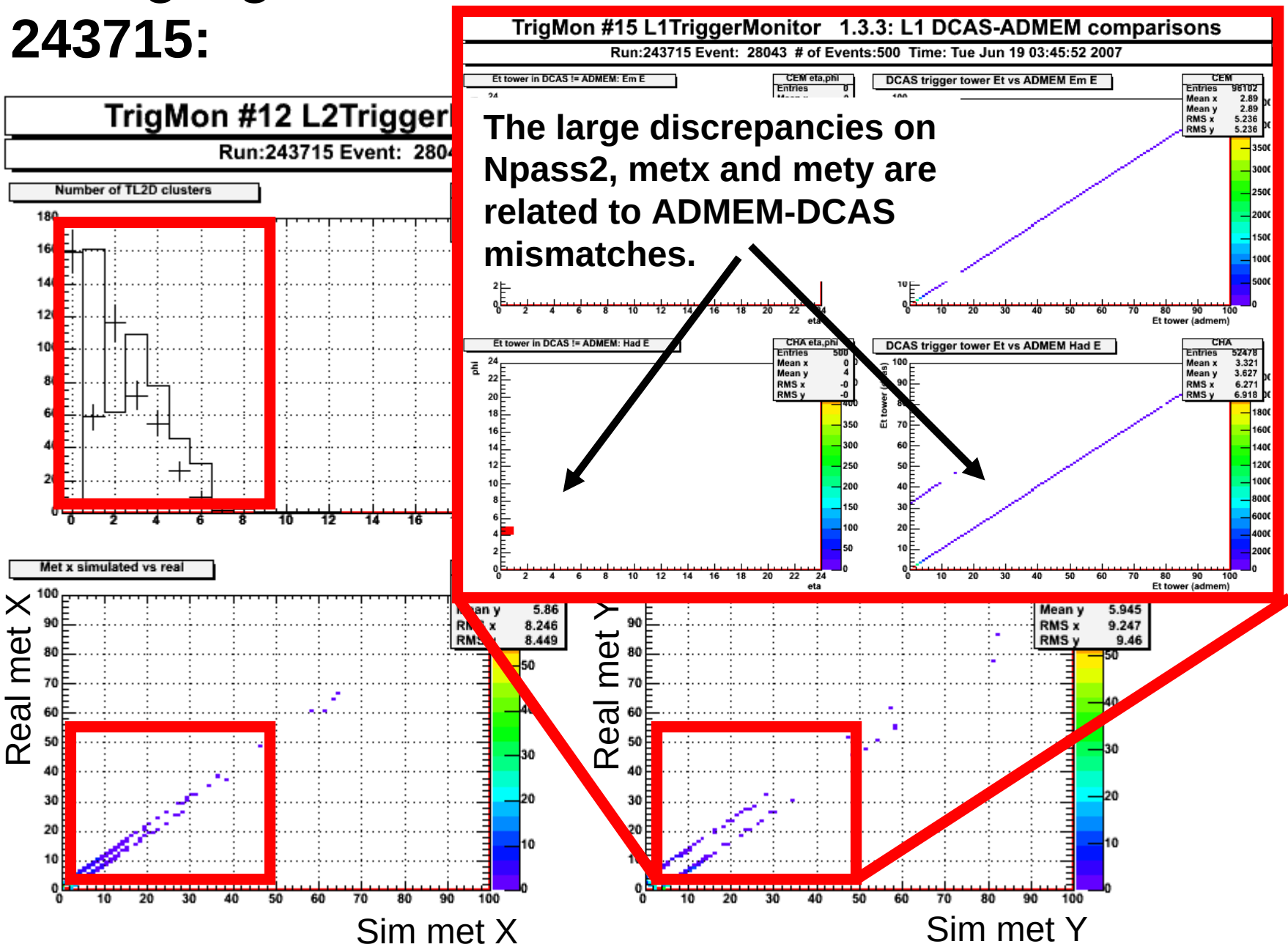

# Clustering algorithm monitor: Pass2 run 243787:

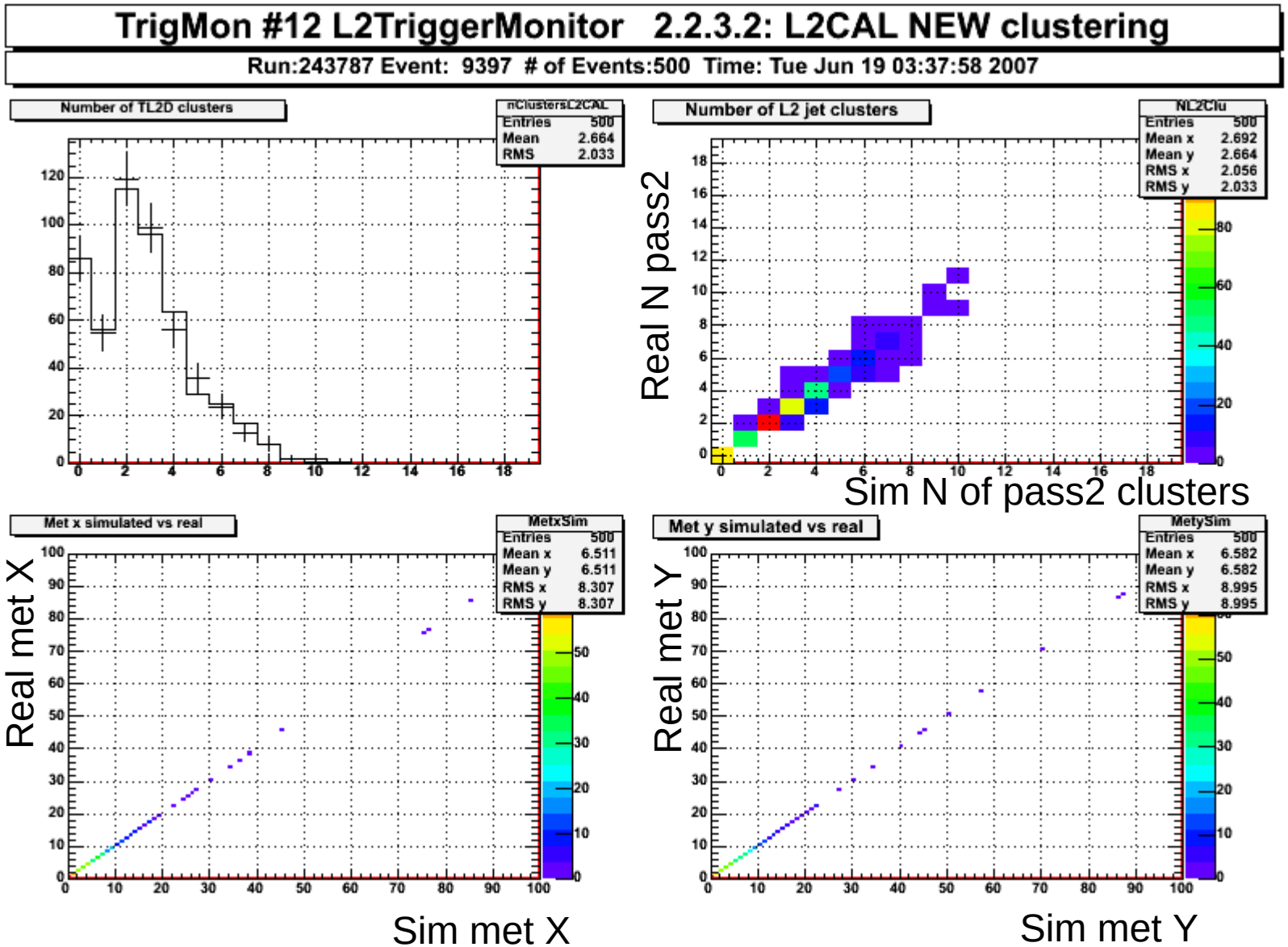

# Clustering algorithm monitor: Pass2 run 243787:

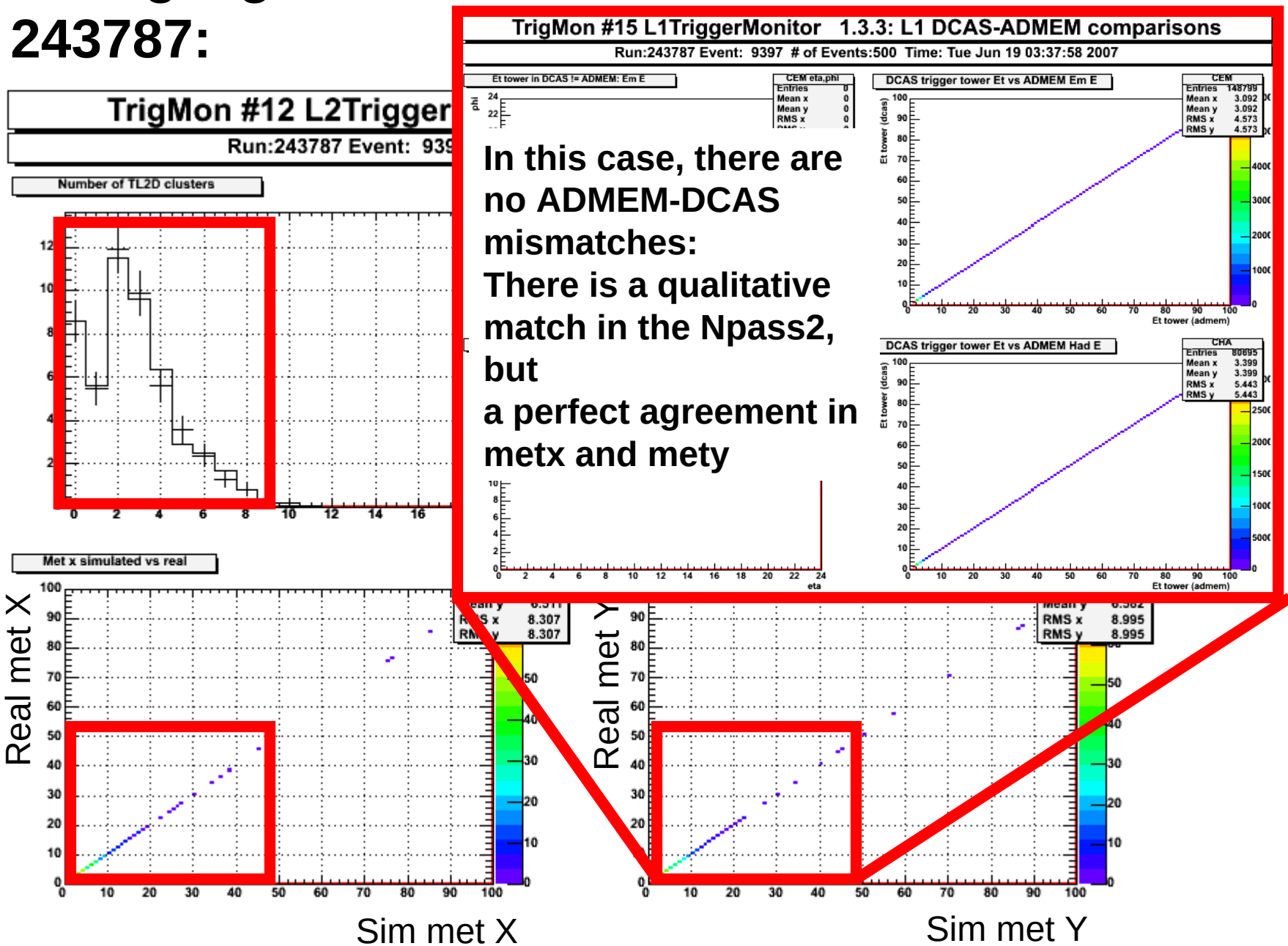


In this case, there are no ADMEM-DCAS mismatches:
There is a qualitative match in the Npass2, but
a perfect agreement in metx and mety

# Clustering algorithm monitor: Pass2 run 243787:

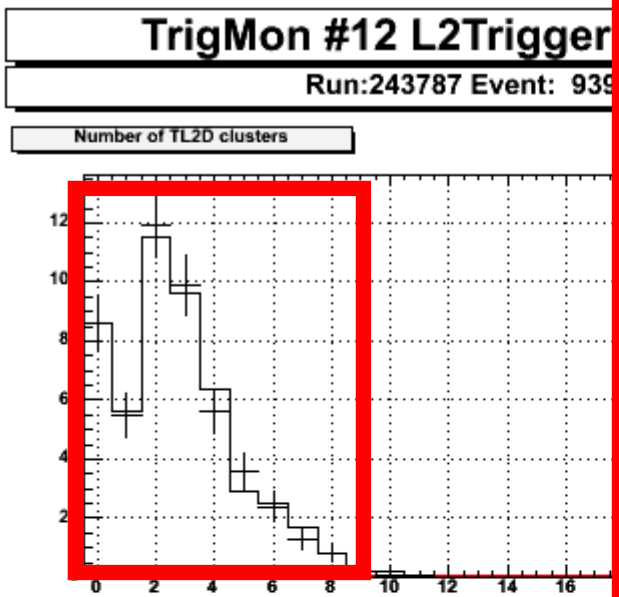


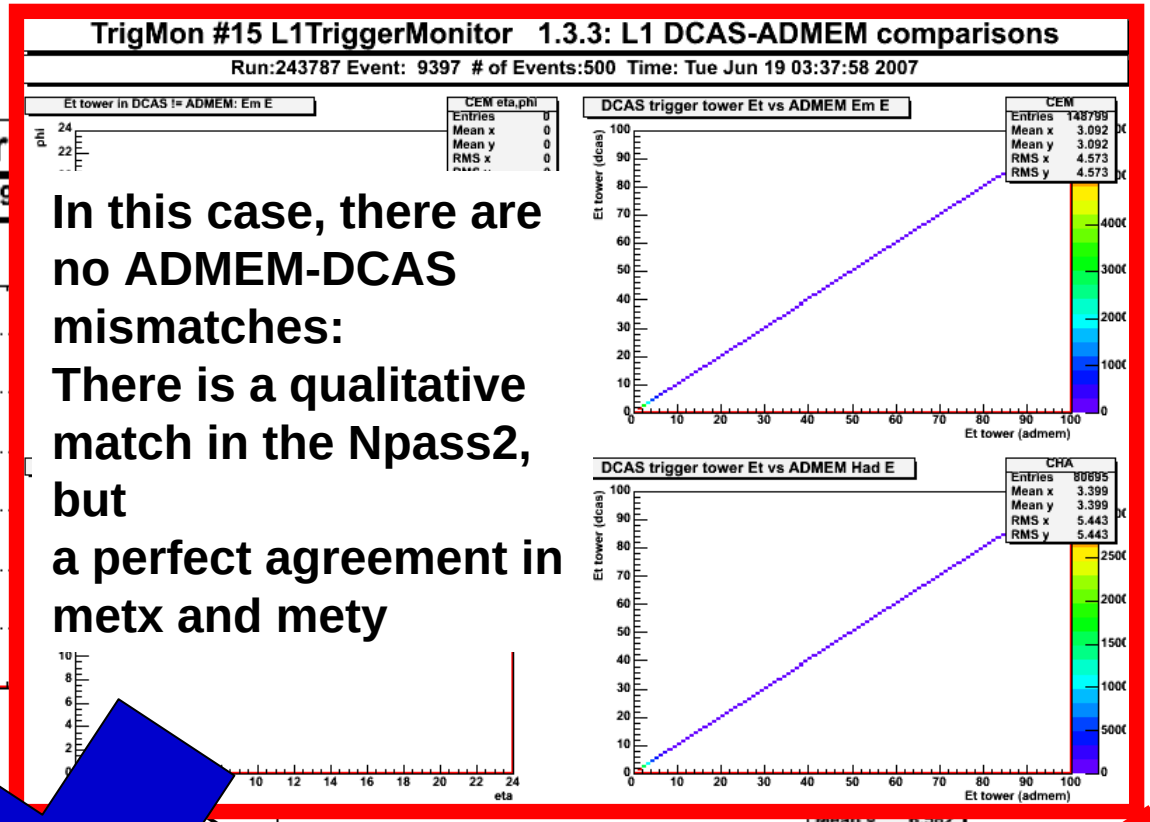


**In this case, there are no ADMEM-DCAS mismatches:**
**There is a qualitative match in the Npass2, but**
**a perfect agreement in metx and mety**

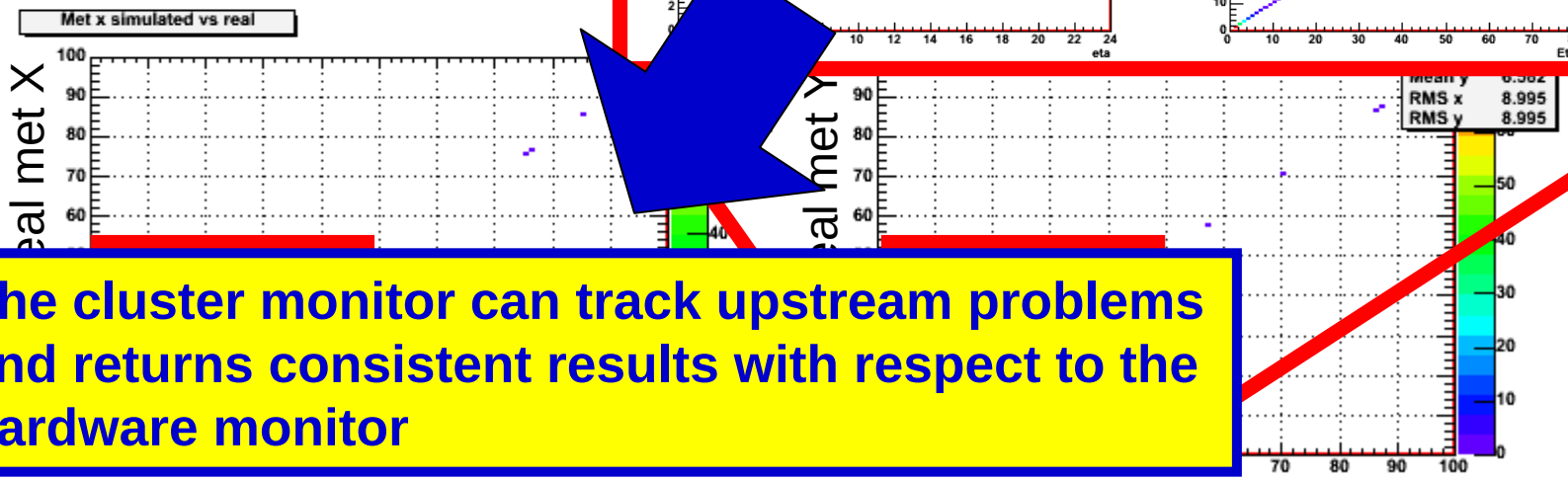


**The cluster monitor can track upstream problems and returns consistent results with respect to the hardware monitor**

Sim met X

Sim met Y

# Clustering algorithm monitor: Pass2 run 243787

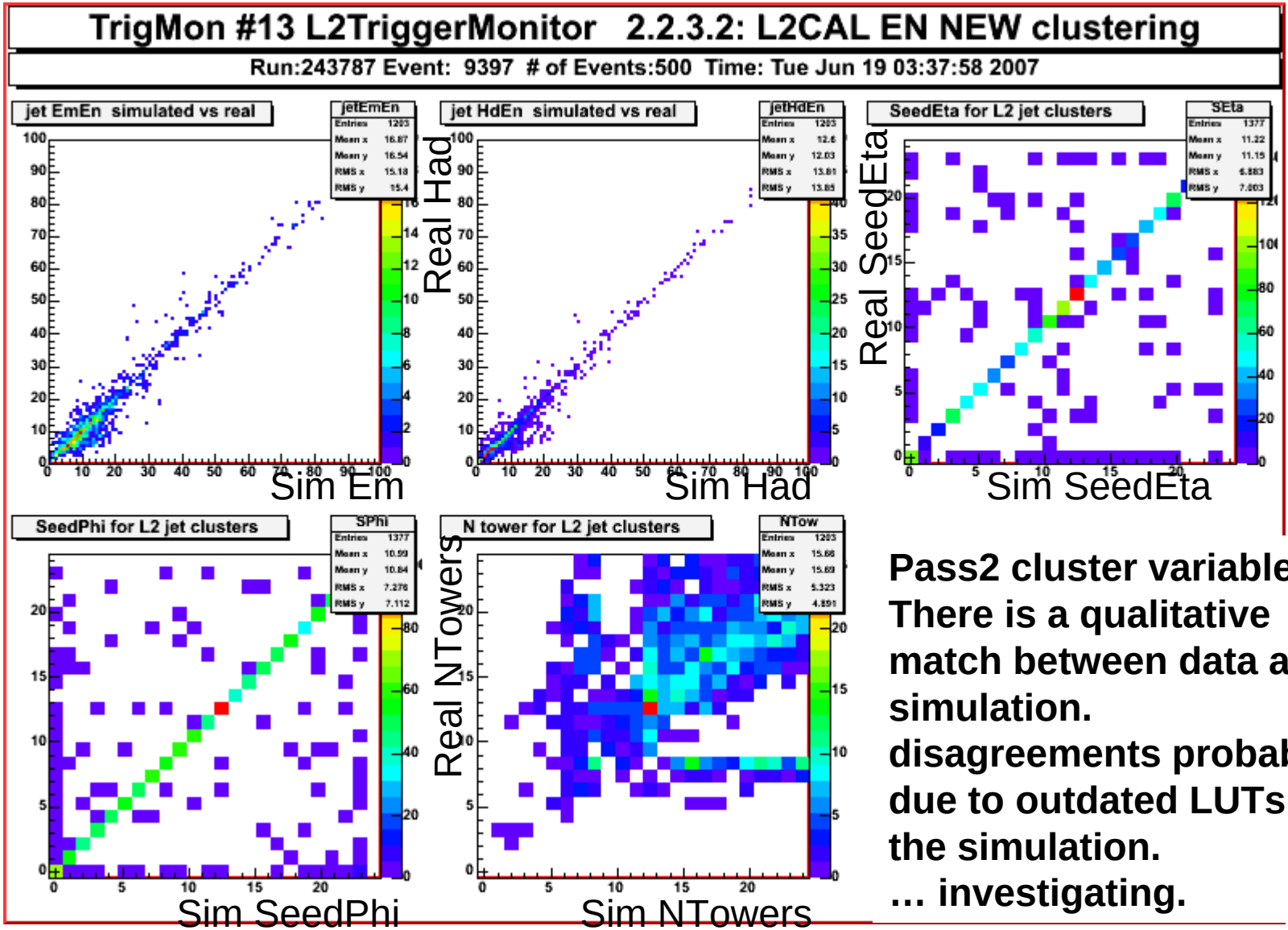


**Pass2 cluster variables: There is a qualitative match between data and simulation. disagreements probably due to outdated LUTs in the simulation. … investigating.**

# Conclusions and plans

- **We have all the tools to validate the complete system.**
- **The hardware is really stable and with the new mezzanine firmware the error rate is of $O(10^{-6})$**
- **We have all the methods to debug the information provided by the new clustering algorithm, based on the comparison between real data and the simulation. We are debugging the simulation code, and we expect to finalize it in few days or so.**
- **We are ready to start the integration of our monitoring with the default TrigMon in control room. We will start next week.**

# - Backup -

# Inputs for the simulation code

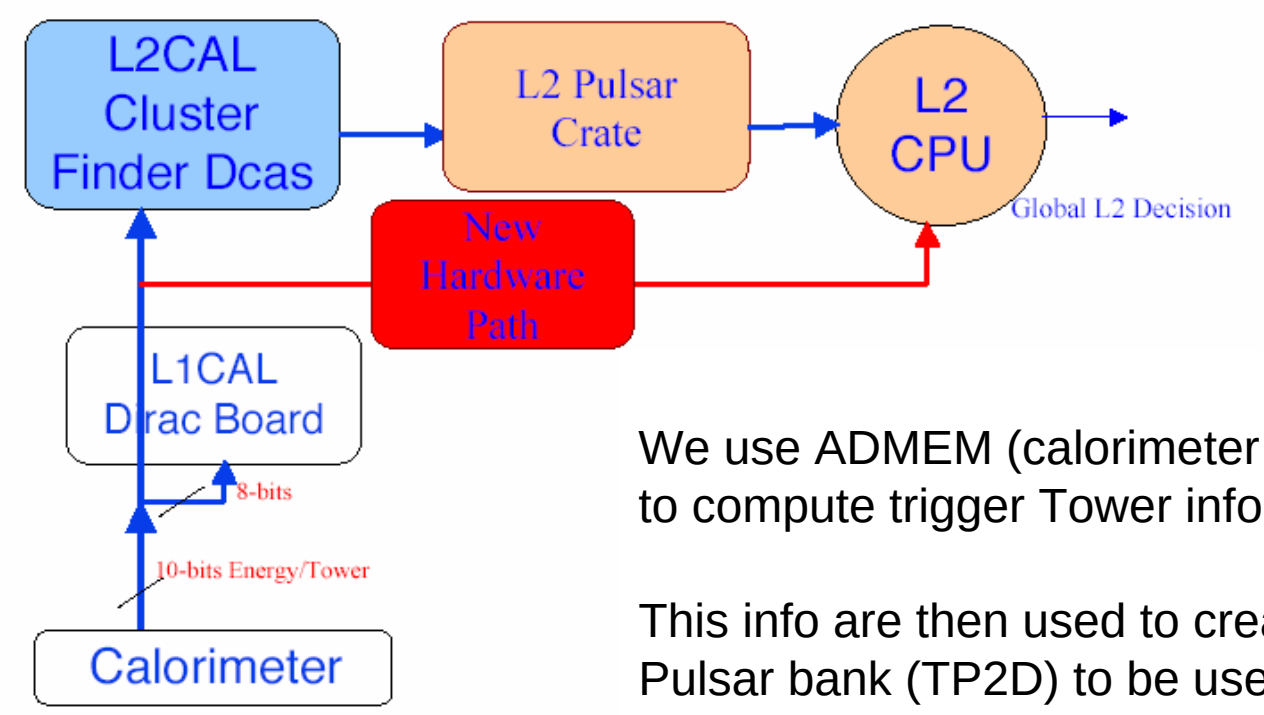


We use ADMEM (calorimeter banks) information to compute trigger Tower information.

This info are then used to create a simulated Pulsar bank (TP2D) to be used to check the data:

# Hardware setup

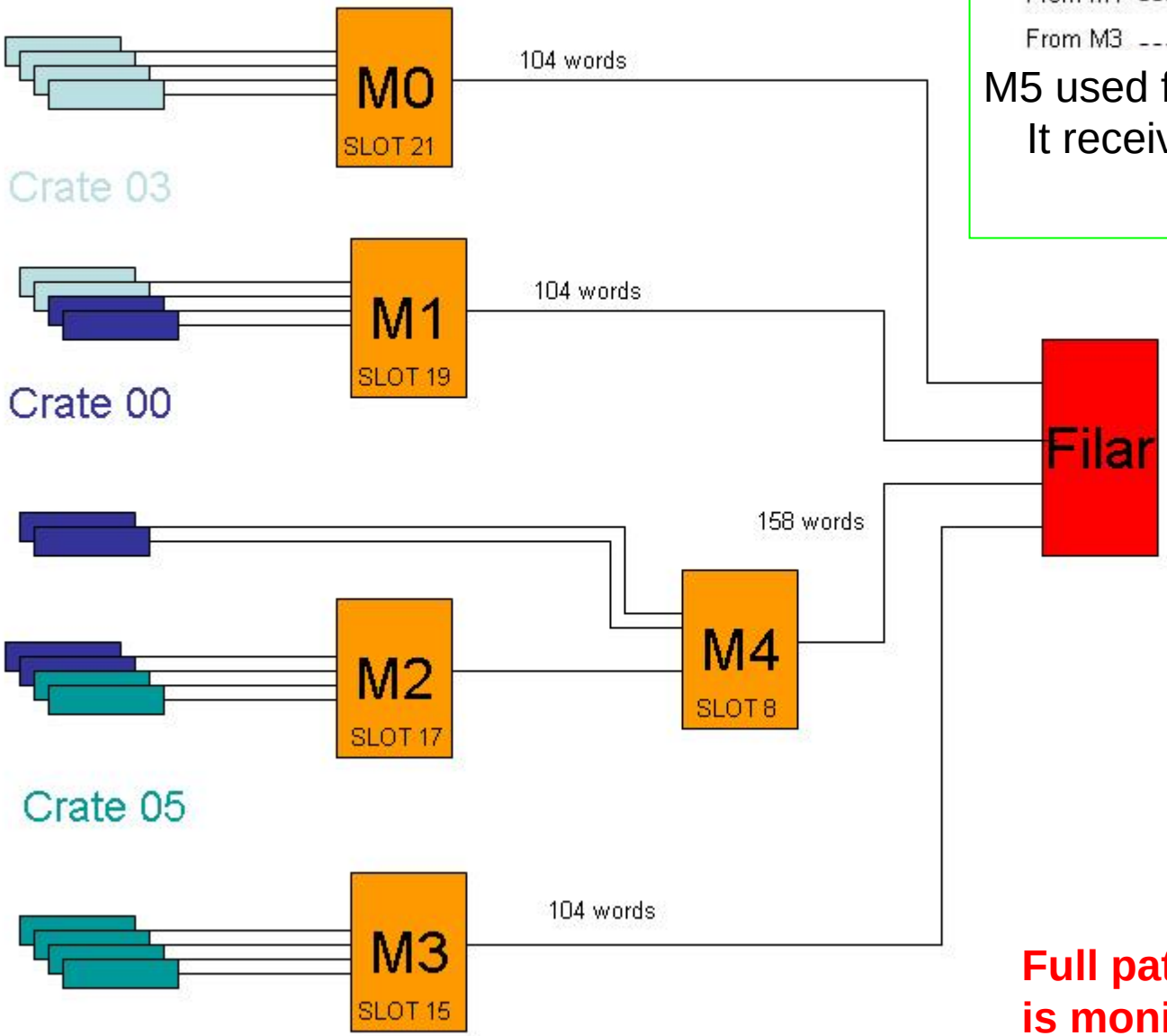


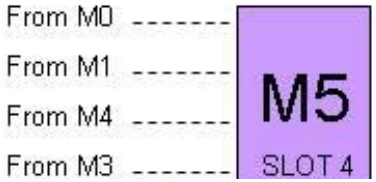


M5 used for timing studies.
It receive the same data sent to L2CPU

**Full path up to the CPU is monitored!**

# L2 CAL system overview

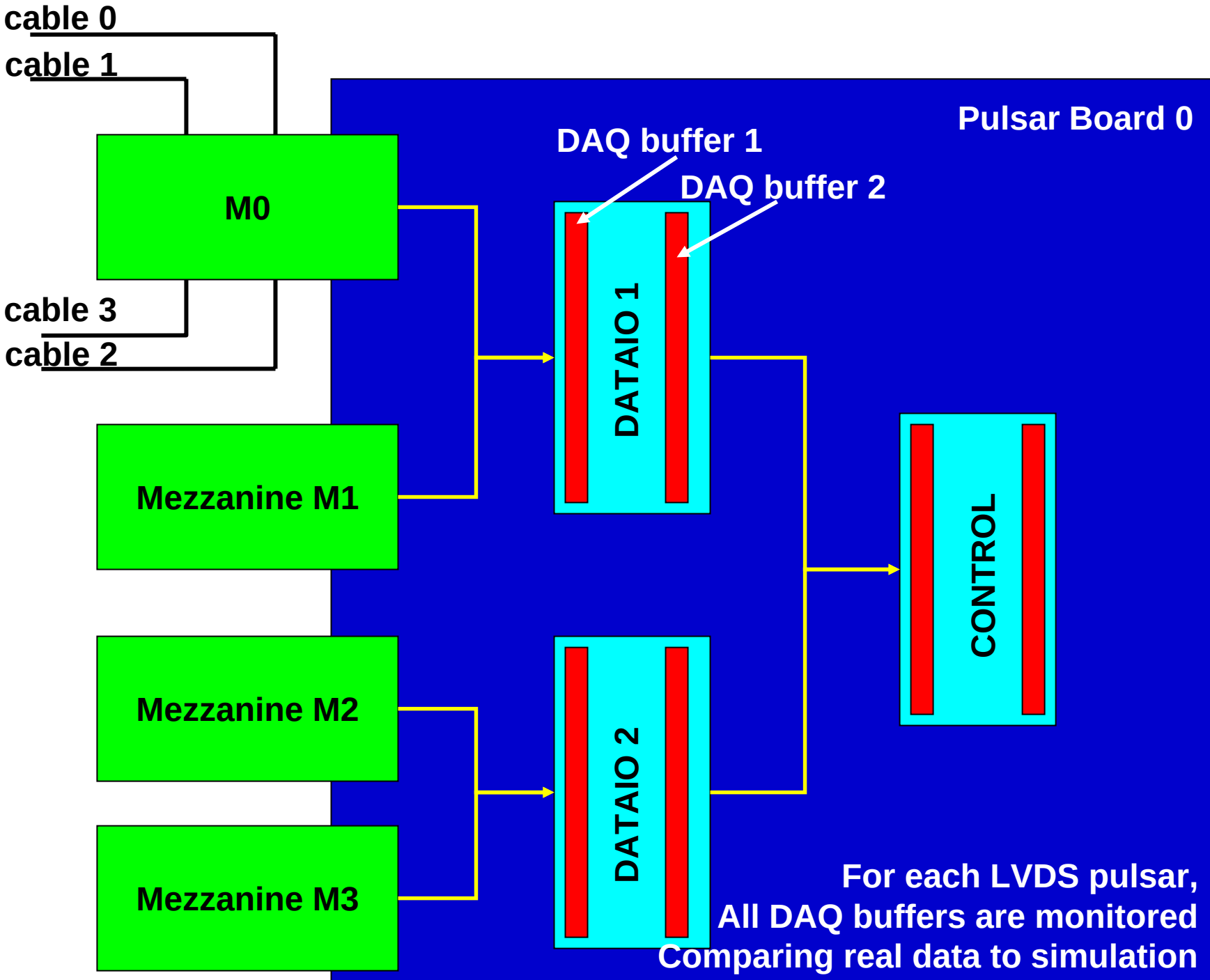
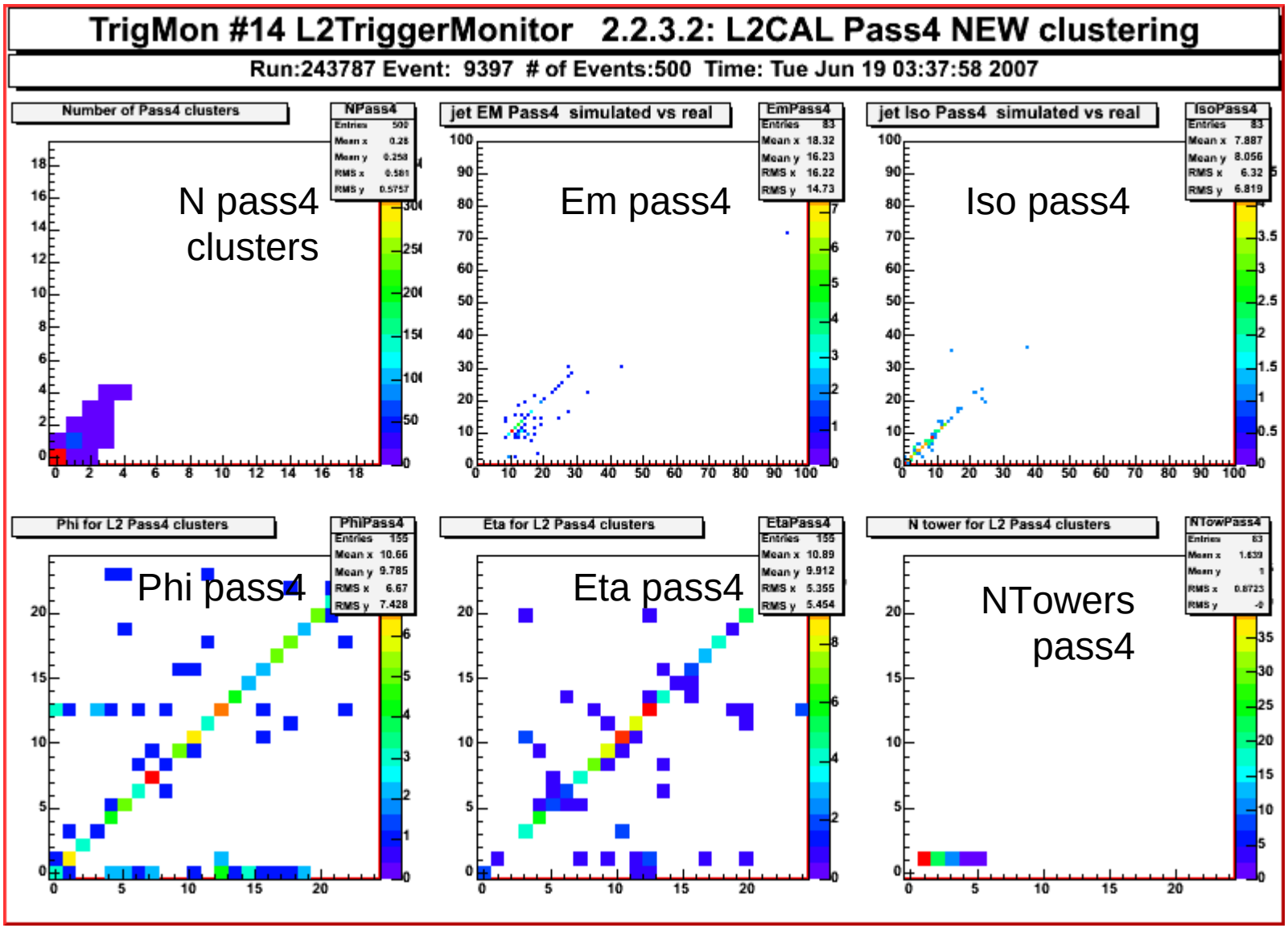
# Clustering algorithm monitor: Pass4