REVISIONS				
ZONE	REV	DESCRIPTION	DATE	APPROVED
		RELEASED FOR PRODUCTION	4/23/99	

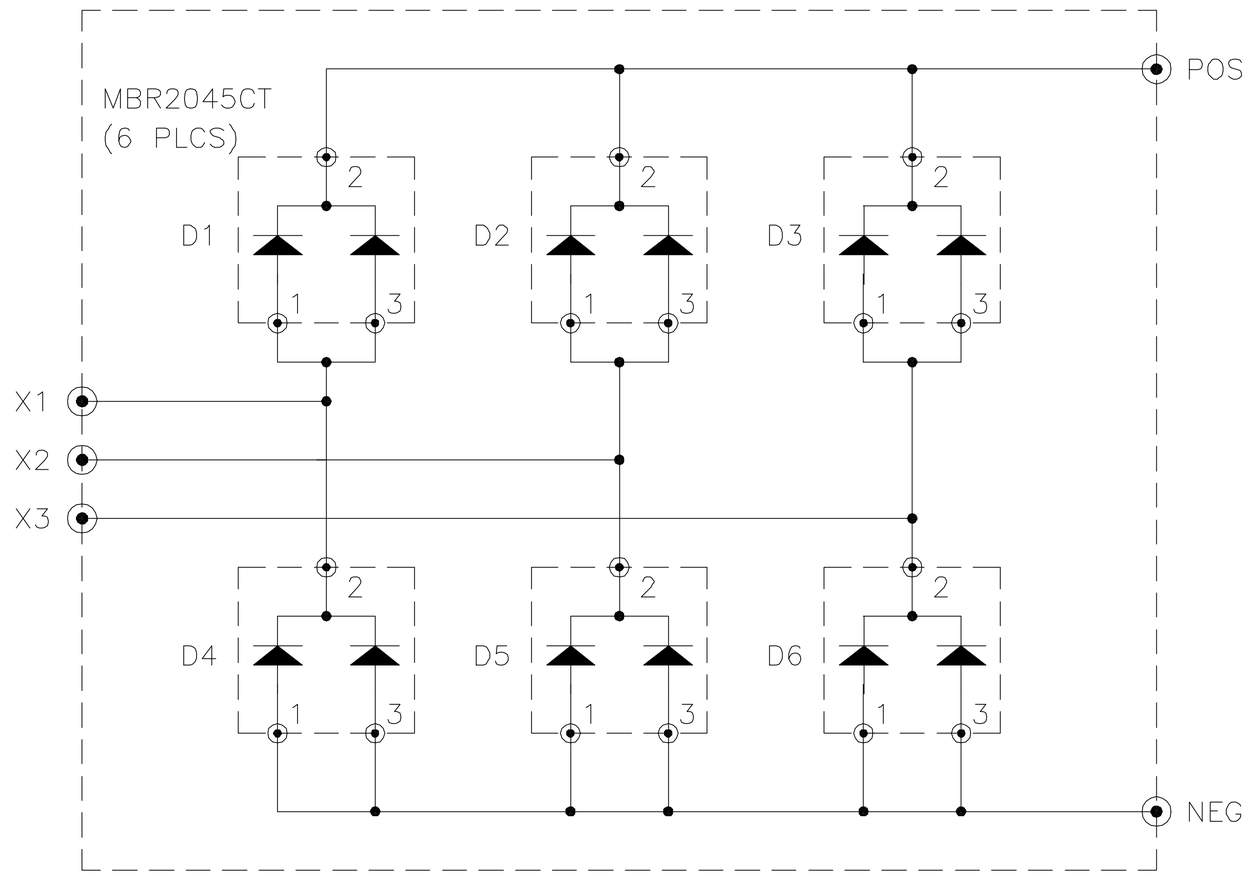

QTY REQD	CAGE NO	PART OR IDENTIFYING NO	NOMENCLATURE OR DESCRIPTION	MATERIAL OR REFERENCE DESIGNATOR	FIND NO
-1			PARTS LIST		

AB1705	SR5010
NEXT ASSY	USED ON
APPLICATION	

UNLESS OTHERWISE SPECIFIED DIMENSIONS ARE IN INCHES. TOLERANCES ARE:
FRACTIONS ± 1/32 DECIMALS .XX ±.02 .XXX ±.010 ANGLES ±0°30'

MATERIAL

DO NOT SCALE DRAWING

CONTRACT NO 99-028
PREP BY L.G.F 4/23/99
CHK BY
ELEC ENGR LASZLO 4/23/99
MECH ENGR
MFG ENGR
QUAL ASSR
REL ENGR
CONF MGMT

POWER ENGINEERING INDS.
RANCHO DOMINGUEZ, CA.

-SCHEMATIC-
DIODE BRIDGE

SIZE C | CAGE NO | DWG NO S1706 | REV NC
SCALE 1/1 | SHEET 1 OF 1

DWG NO S1706 SH REV NC

NOTES: UNLESS OTHERWISE SPECIFIED