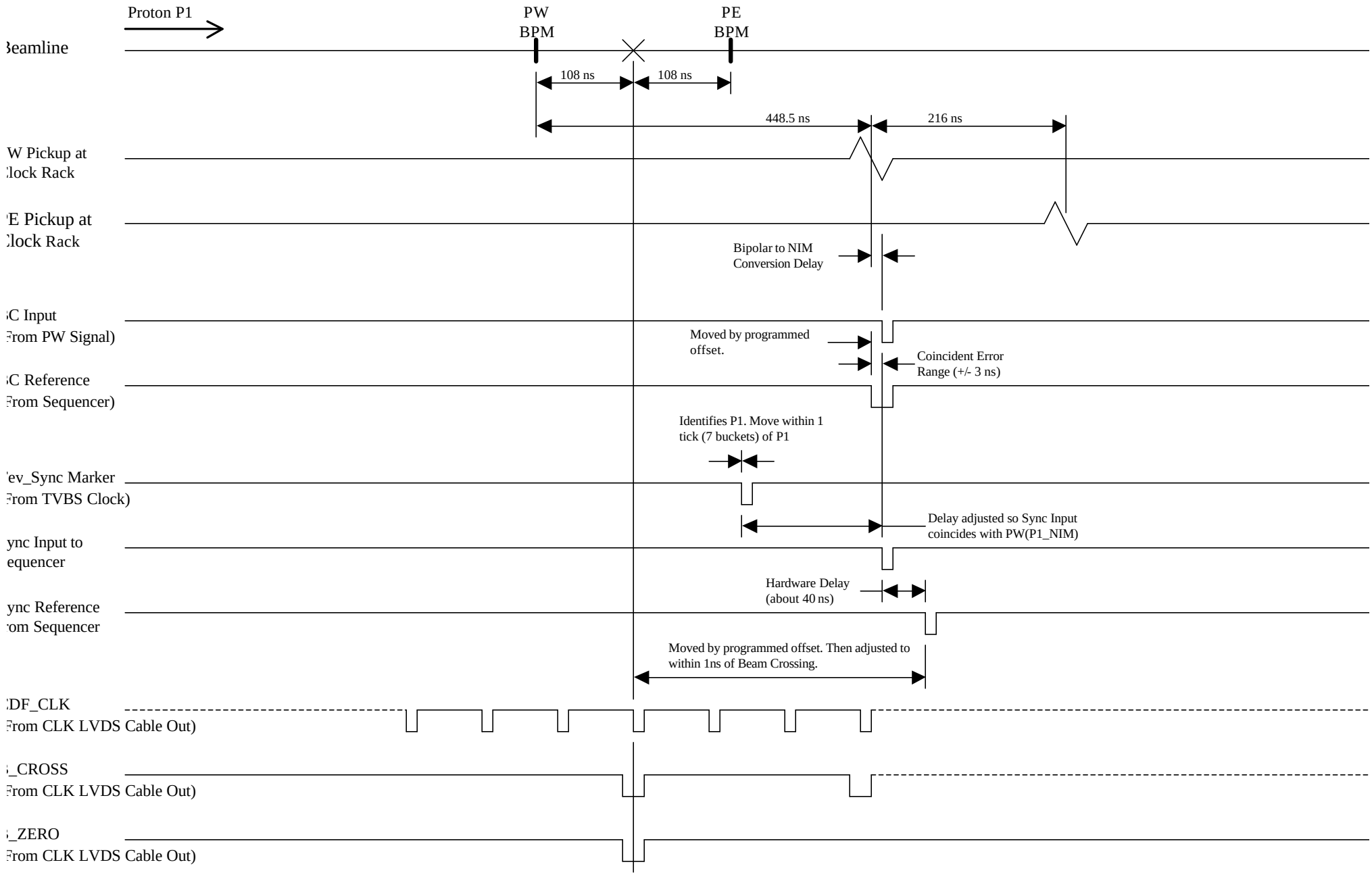Clock to Beam Timing at CDF