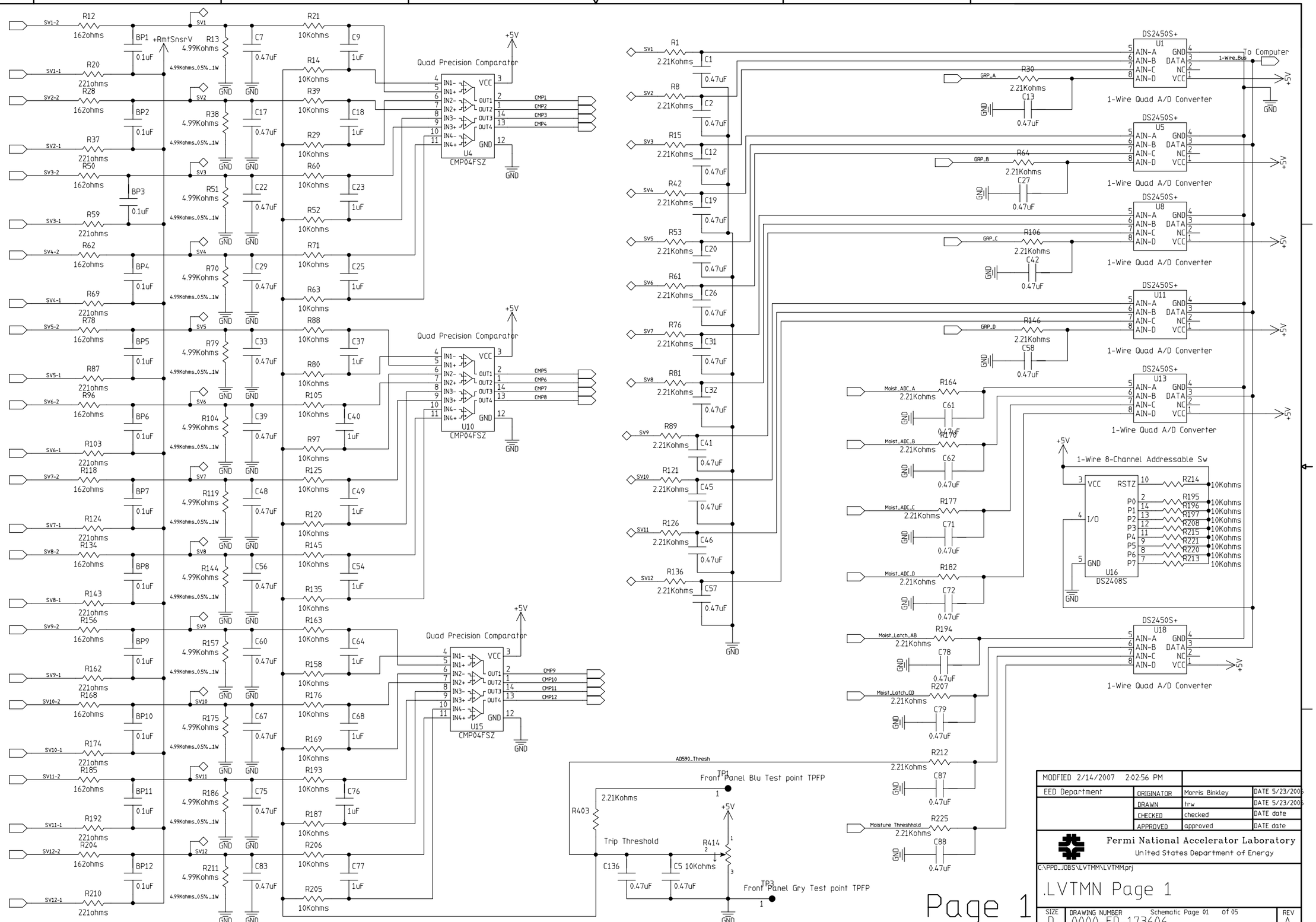

MODFIED 2/14/2007 2:02:56 PM			
EED Department	ORIGINATOR	Morris Binkley	DATE 5/23/2006
	DRAWN	trw	DATE 5/23/2006
	CHECKED	checked	DATE date
	APPROVED	approved	DATE date

Fermi National Accelerator Laboratory
United States Department of Energy

C:\PPD_JOBS\LVTMM\LVTMM.prj

.LVTMN Page 1

SIZE	DRAWING NUMBER	REV
D	0000-ED-173606	A

Schematic Page 01 of 05

H=8ND; V=4LA

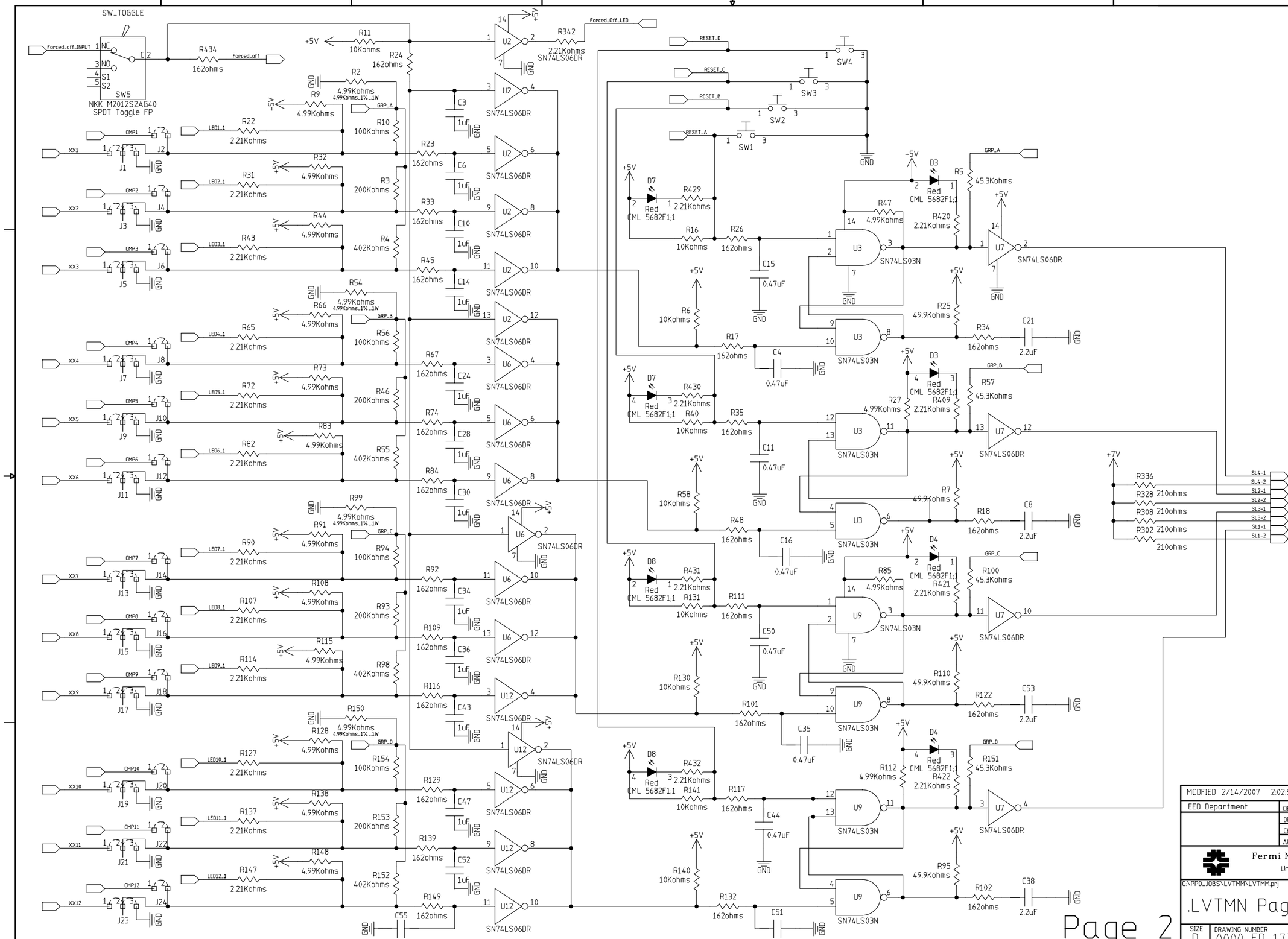

MODIFIED 2/14/2007 2:02:56 PM			
EED Department	ORIGINATOR	Morris Binkley	DATE 5/23/2006
	DRAWN	trw	DATE 5/23/2006
	CHECKED	checked	DATE date
	APPROVED	approved	DATE date

Fermi National Accelerator Laboratory
United States Department of Energy

C:\PPD_JOBS\LVTMM\LVTMM.prj

.LVTMN Page 2

SIZE	DRAWING NUMBER		REV
D	0000-ED-173606	Schematic Page 02 of 05	A

Page 2

H=8ND; V=4LA

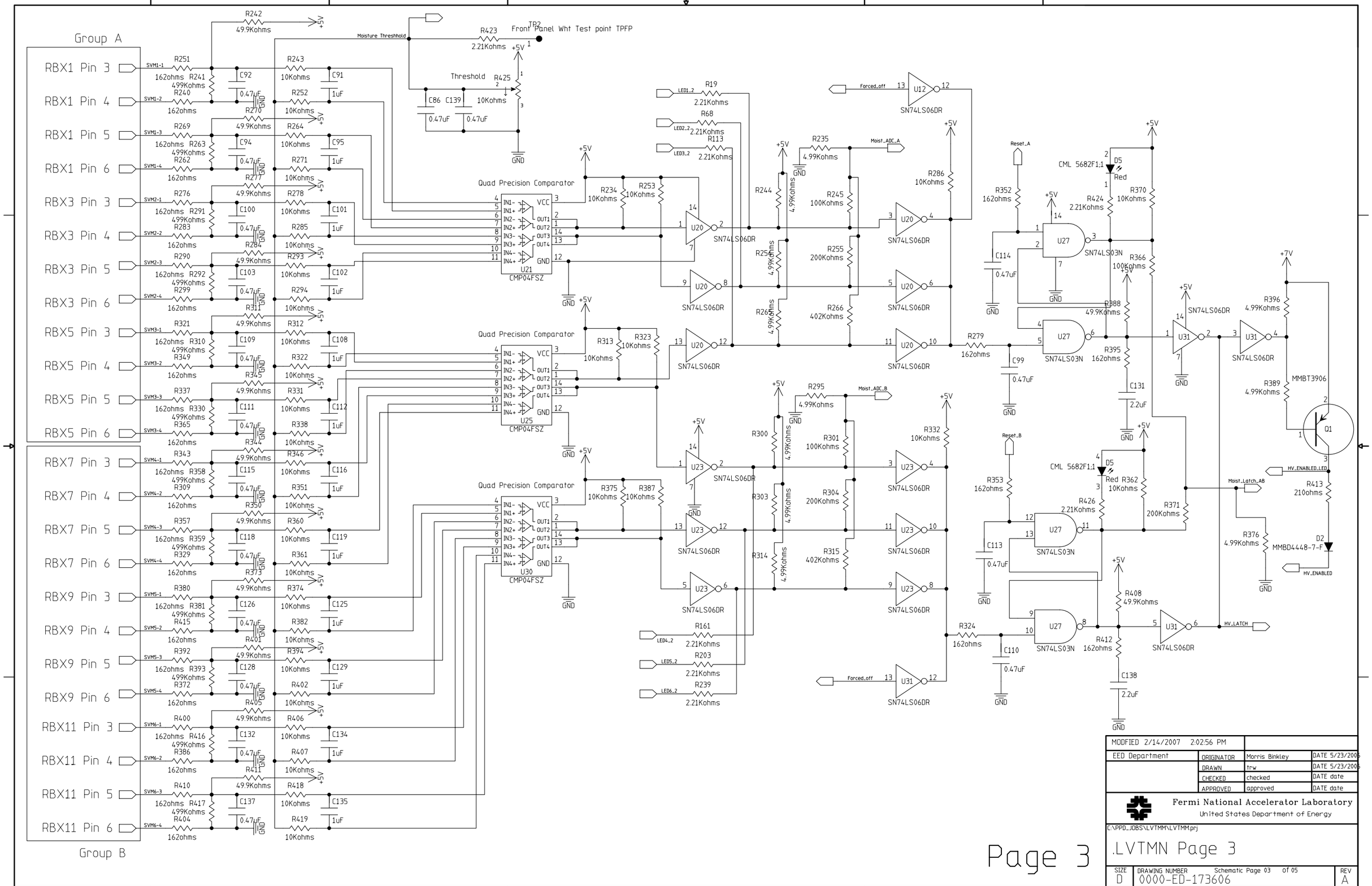
Group A
RBX1 Pin 3
RBX1 Pin 4
RBX1 Pin 5
RBX1 Pin 6
RBX3 Pin 3
RBX3 Pin 4
RBX3 Pin 5
RBX3 Pin 6
RBX5 Pin 3
RBX5 Pin 4
RBX5 Pin 5
RBX5 Pin 6
RBX7 Pin 3
RBX7 Pin 4
RBX7 Pin 5
RBX7 Pin 6
RBX9 Pin 3
RBX9 Pin 4
RBX9 Pin 5
RBX9 Pin 6
RBX11 Pin 3
RBX11 Pin 4
RBX11 Pin 5
RBX11 Pin 6
Group B
Moisture Threshhold
Front Panel Wht Test point TPFP
Threshold
Quad Precision Comparator
CMP04FSZ
SN74LS06DR
SN74LS03N
CML 5682F1;1
MMBT3906
MMBD4448-7-F
Moist_ADC_A
Moist_ADC_B
Forced_off
Reset_A
Reset_B
Moist_Latch_AB
HV_ENABLED_LED
HV_ENABLED
HV_LATCH
LED1_2
LED2_2
LED3_2
LED4_2
LED5_2
LED6_2
MODFIED 2/14/2007 2:02:56 PM
EED Department
ORIGINATOR Morris Binkley DATE 5/23/2006
DRAWN trw DATE 5/23/2006
CHECKED checked DATE date
APPROVED approved DATE date
Fermi National Accelerator Laboratory
United States Department of Energy
C:\PPD_JOBS\LVTMM\LVTMM.prj
.LVTMN Page 3
Page 3
SIZE D
DRAWING NUMBER 0000-ED-173606
Schematic Page 03 of 05
REV A

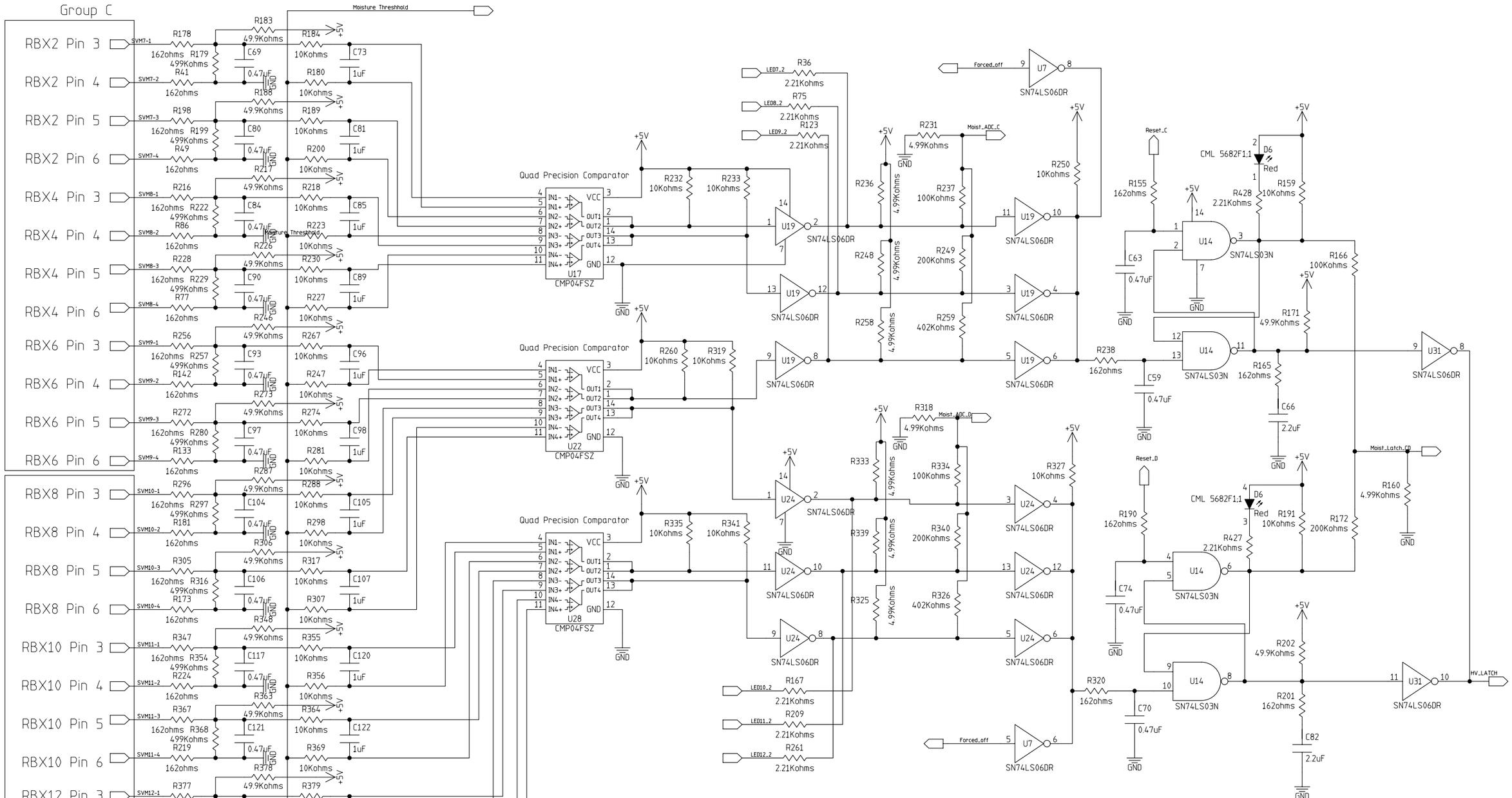

MODFIED 2/14/2007 1:04:46 PM

EED Department	ORIGINATOR	Morris Binkley	DATE 5/23/2006
	DRAWN	trw	DATE 5/23/2006
	CHECKED	checked	DATE date
	APPROVED	approved	DATE date

Fermi National Accelerator Laboratory
United States Department of Energy

C:\PPD_JOBS\LVTMM\LVTMM.prj

.LVTMN Page 4

Page 4

SIZE	DRAWING NUMBER	REV
D	0000-ED-173606	A

Schematic Page 04 of 05

H=BND; V=4LA

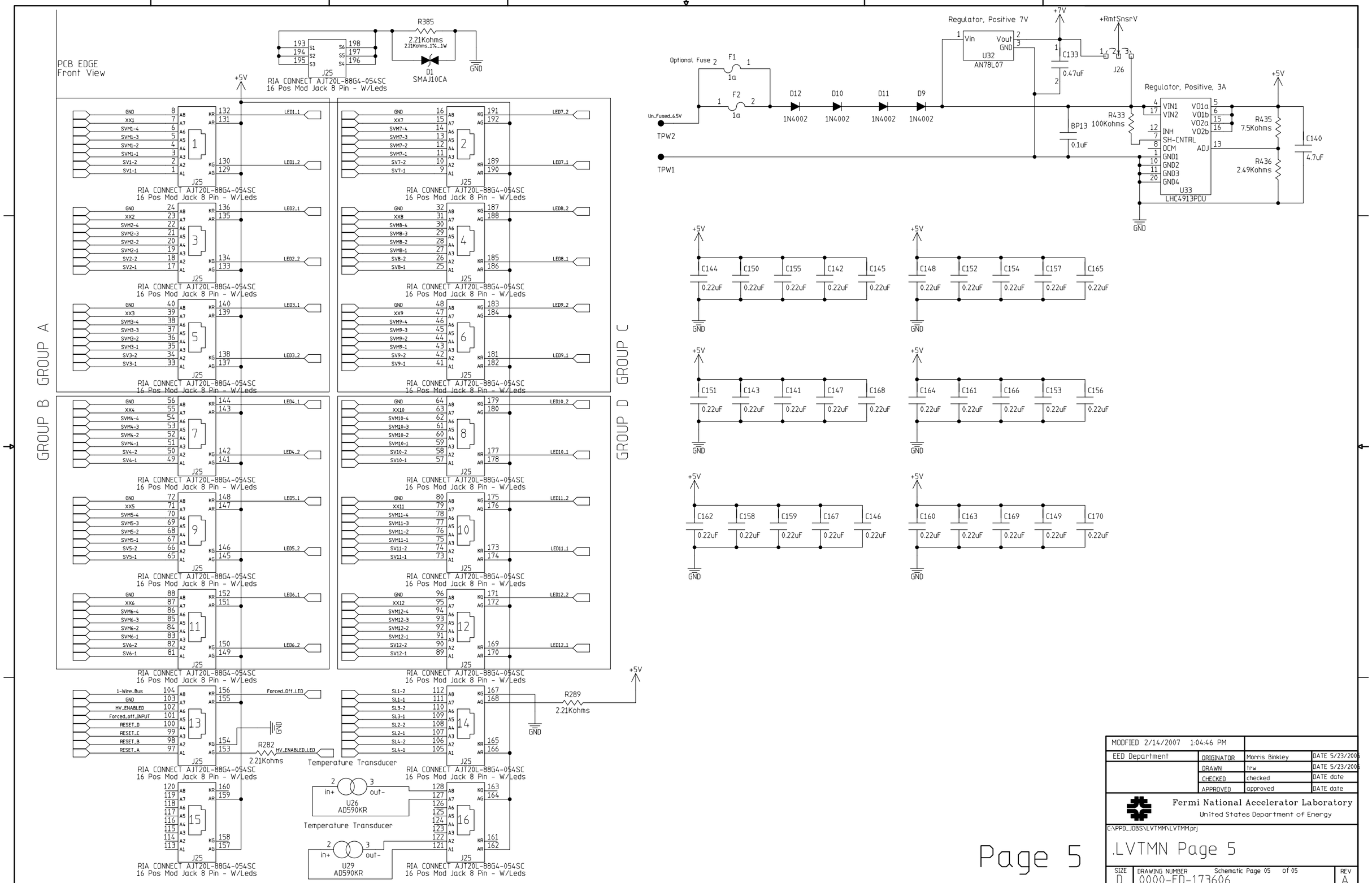

MODFIED 2/14/2007 1:04:46 PM			
EED Department	ORIGINATOR	Morris Binkley	DATE 5/23/2006
	DRAWN	trw	DATE 5/23/2006
	CHECKED	checked	DATE date
	APPROVED	approved	DATE date

Fermi National Accelerator Laboratory
United States Department of Energy

C:\PPD_JOBS\LVTMM\LVTMM.prj

.LVTMN Page 5

Page 5

SIZE	DRAWING NUMBER	REV
D	0000-ED-173606	A

Schematic Page 05 of 05

H=BND; V=4LA