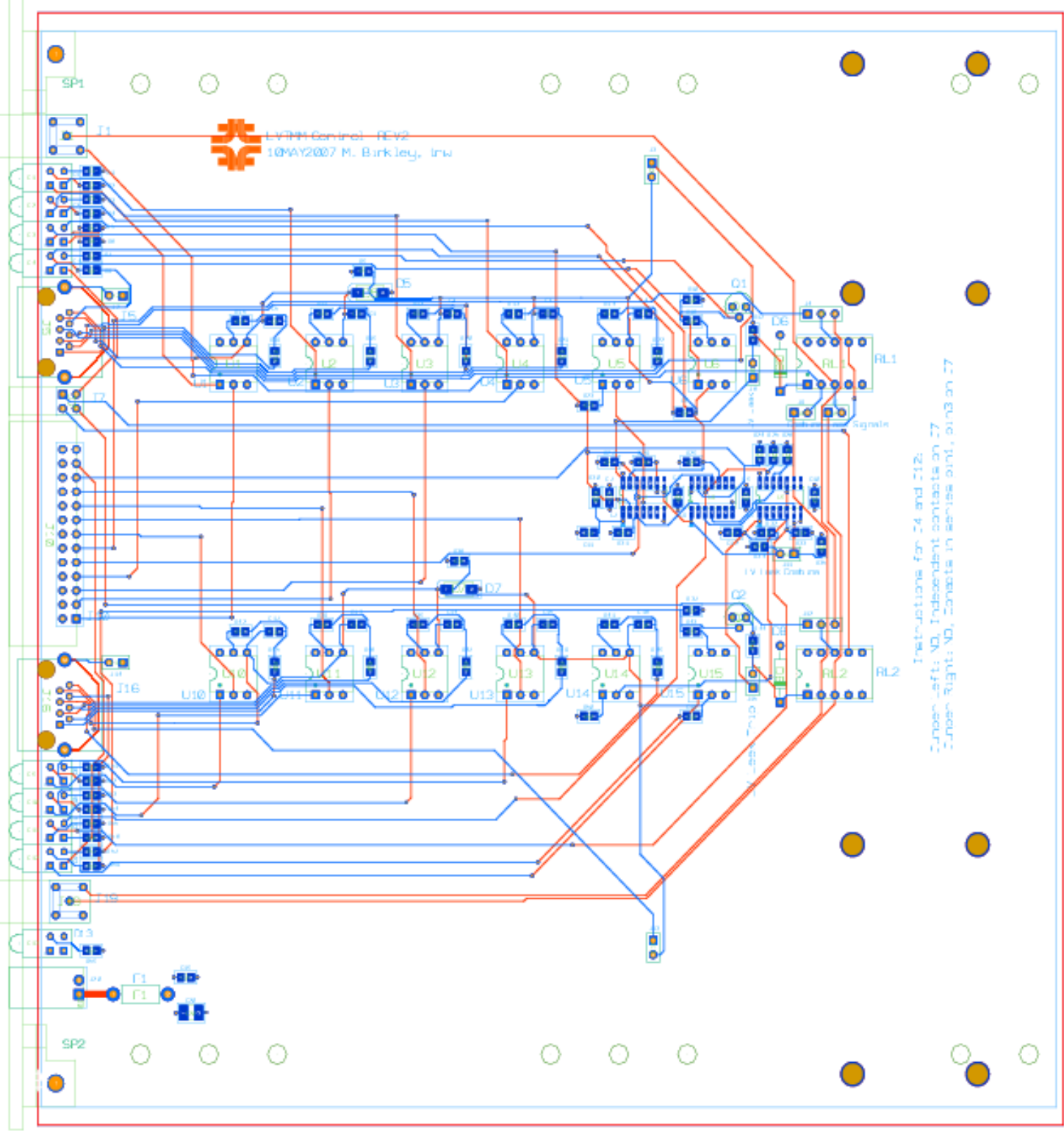

LVTMM Control REV2
10MAY2007 M. Birkley, Inw
SP1
SP2
J1
J5
J7
J10
J16
J19
J13
F1
D5
D6
D7
Q1
Q2
RL1
RL2
U1
U2
U3
U4
U5
U6
U10
U11
U12
U13
U14
U15
Signals
Instructions for J4 and J12:
Jumper Left: NO, Independent contacts on J7
Jumper Right: NO, Contacts in series pin1, pin3 on J7