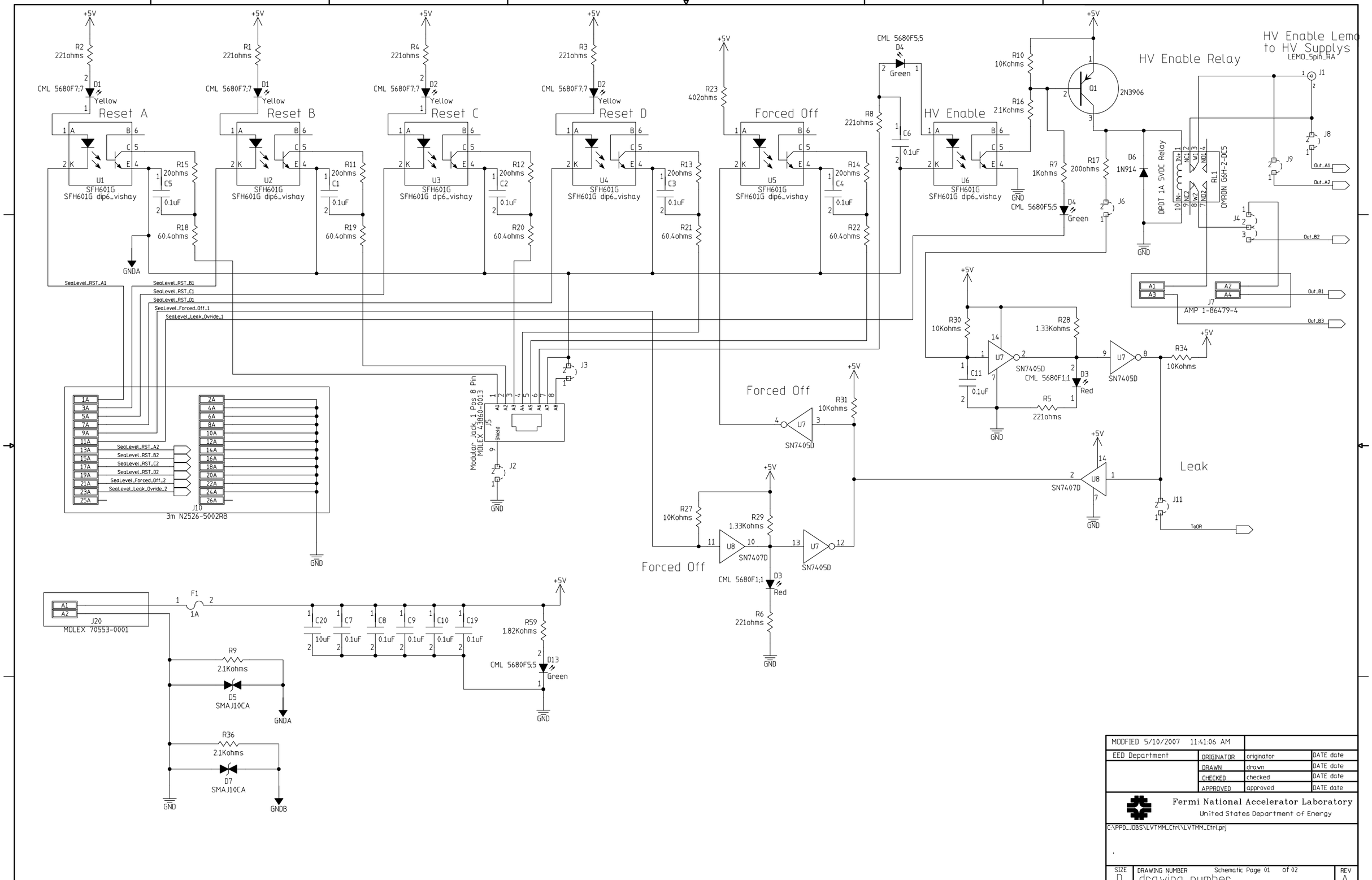
Reset A
Reset B
Reset C
Reset D
Forced Off
HV Enable
HV Enable Relay
HV Enable Lemo to HV Supplys
LEMO_5pin_RA
SFH601G dip6_vishay
CML 5680F5,5
CML 5680F7,7
CML 5680F1,1
2N3906
DPDT 1A 5VDC Relay
OMRON G6H-2-DC5
AMP 1-86479-4
SN7405D
SN7407D
Leak
Modular Jack, 1 Pos 8 Pin MOLEX 43860-0013
3m N2526-5002RB
MOLEX 70553-0001
SmaLevel_RST_A1
SmaLevel_RST_B1
SmaLevel_RST_C1
SmaLevel_RST_D1
SmaLevel_Forced_Off_1
SmaLevel_Leak_Ovride_1
SmaLevel_RST_A2
SmaLevel_RST_B2
SmaLevel_RST_C2
SmaLevel_RST_D2
SmaLevel_Forced_Off_2
SmaLevel_Leak_Ovride_2
Out_A1
Out_A2
Out_B1
Out_B2
Out_B3
TeOR
GND
GNDA
GNDB
MODFIED 5/10/2007 11:41:06 AM
EED Department
ORIGINATOR originator DATE date
DRAWN drawn DATE date
CHECKED checked DATE date
APPROVED approved DATE date
Fermi National Accelerator Laboratory
United States Department of Energy
C:\PPD_JOBS\LVTMM_Ctrl\LVTMM_Ctrl.prj
SIZE D
DRAWING NUMBER Schematic Page 01 of 02
drawing number
REV A
H=8ND, V=4LA

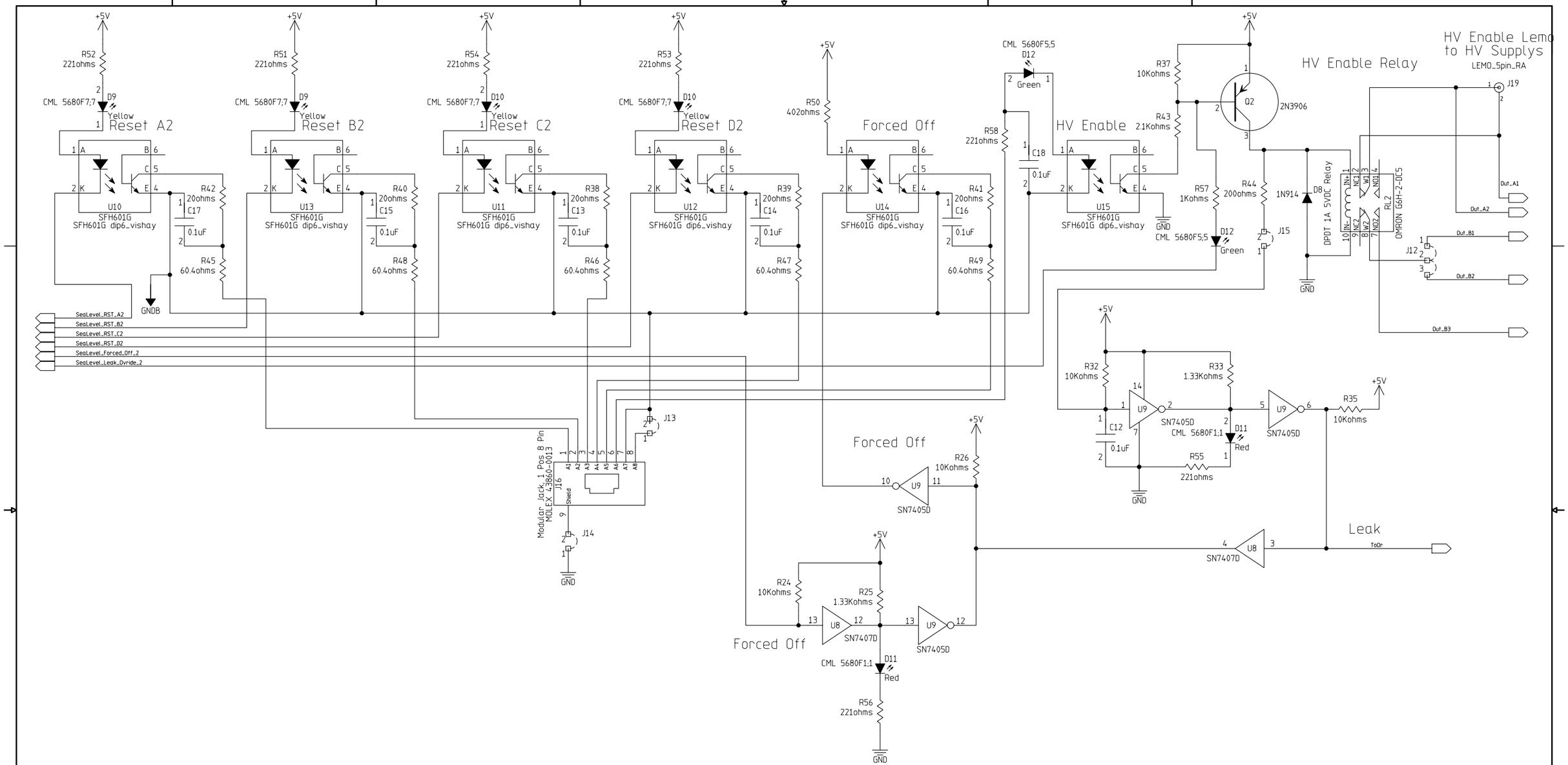

MODFIED 5/10/2007 11:41:06 AM			
EED Department	ORIGINATOR	originator	DATE date
	DRAWN	drawn	DATE date
	CHECKED	checked	DATE date
	APPROVED	approved	DATE date

Fermi National Accelerator Laboratory
United States Department of Energy

C:\PPD_JOBS\LVTMM_Ctrl\LVTMM_Ctrl.prj

SIZE	DRAWING NUMBER	REV
D	drawing number (Schematic Page 02 of 02)	A

H=BND, V=4LA