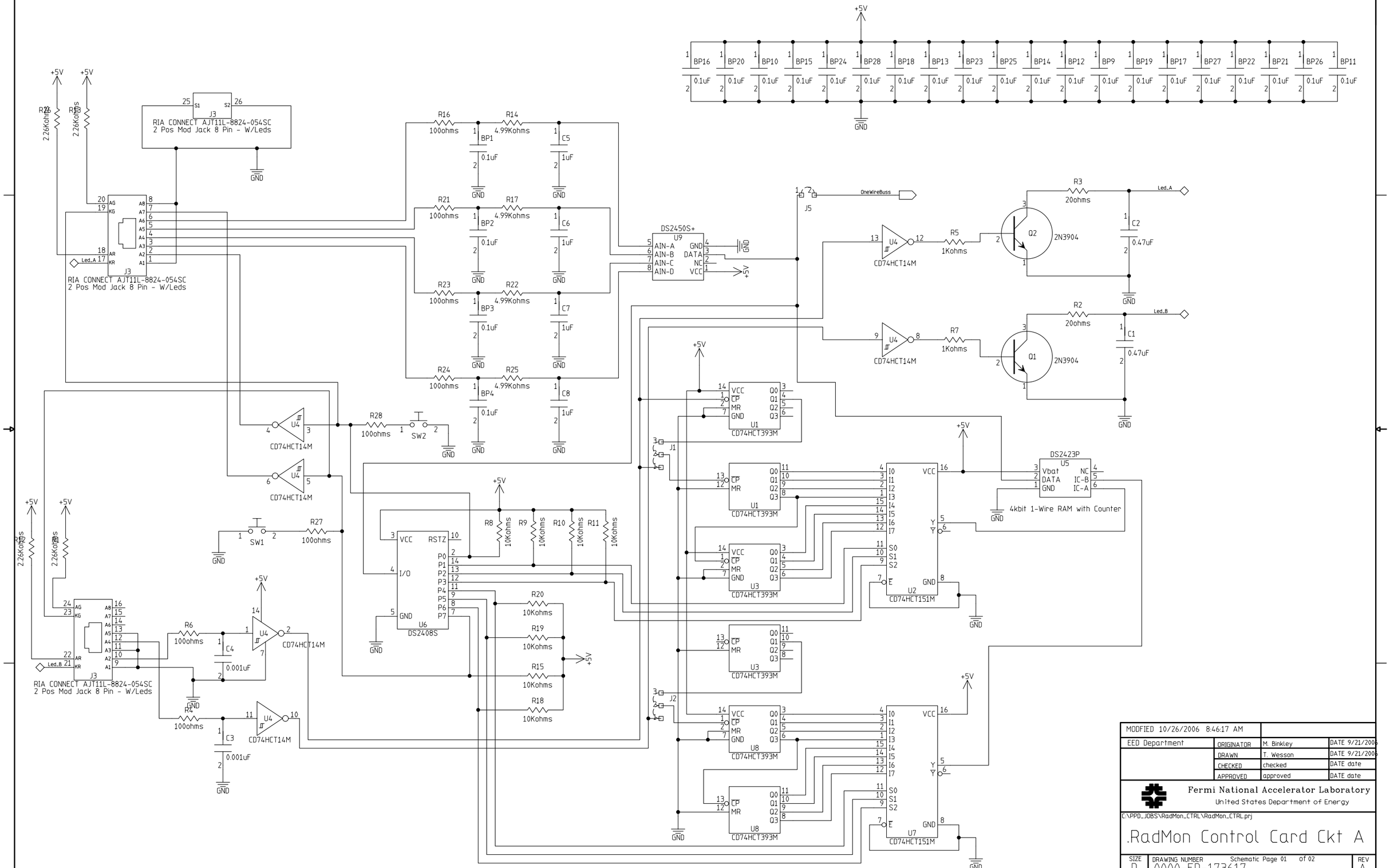
RIA CONNECT AJT11L-8824-054SC
2 Pos Mod Jack 8 Pin - W/Leds
DS2450S+
U9
AIN-A
AIN-B
AIN-C
AIN-D
GND
DATA
NC
VCC
OneWireBuss
J5
CD74HCT14M
U4
R5
1Kohms
R7
1Kohms
R3
20ohms
R2
20ohms
Led_A
Led_B
Q2
Q1
2N3904
C2
0.47uF
C1
0.47uF
CD74HCT393M
U1
U3
U8
DS2423P
U5
Vbat
DATA
GND
NC
IC-B
IC-A
4kbit 1-Wire RAM with Counter
CD74HCT151M
U2
U7
DS2408S
U6
RSTZ
I/O
P0
P1
P2
P3
P4
P5
P6
P7
R8
R9
R10
R11
10Kohms
R20
R19
R15
R18
R16
R14
R21
R17
R23
R22
R24
R25
100ohms
4.99Kohms
BP1
BP2
BP3
BP4
C5
C6
C7
C8
0.1uF
1uF
R28
R27
SW1
SW2
R6
R4
C4
C3
0.001uF
2.26Kohms
+5V
GND
J1
J2
J3
BP16
BP20
BP10
BP15
BP24
BP28
BP18
BP13
BP23
BP25
BP14
BP12
BP9
BP19
BP17
BP27
BP22
BP21
BP26
BP11
MODFIED 10/26/2006 8:46:17 AM
EED Department
ORIGINATOR M. Binkley DATE 9/21/2006
DRAWN T. Wesson DATE 9/21/2006
CHECKED checked DATE date
APPROVED approved DATE date
Fermi National Accelerator Laboratory
United States Department of Energy
C:\PPD_JOBS\RadMon_CTRL\RadMon_CTRL.prj
.RadMon Control Card Ckt A
SIZE D
DRAWING NUMBER 0000-ED-173617
Schematic Page 01 of 02
REV A
H=BND, V=4LA

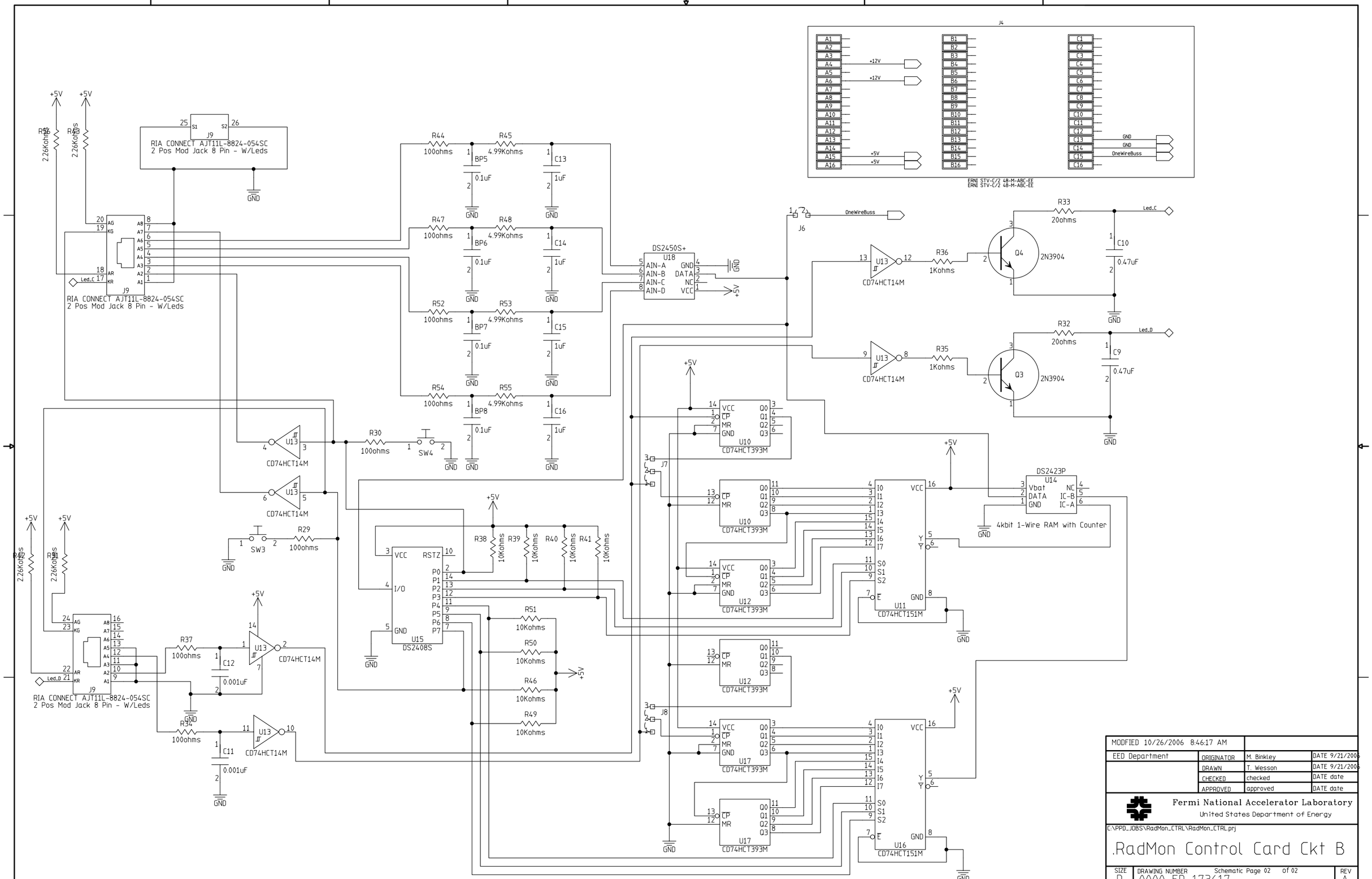
J4
ERNI STV-C/2 48-M-ABC-EE
ERNI STV-C/2 48-M-ABC-EE
+12V
+5V
GND
OneWireBuss
J9
RIA CONNECT AJT11L-8824-054SC
2 Pos Mod Jack 8 Pin - W/Leds
Led_C
Led_D
R44 100ohms
R45 4.99Kohms
R47 100ohms
R48 4.99Kohms
R52 100ohms
R53 4.99Kohms
R54 100ohms
R55 4.99Kohms
BP5 0.1uF
BP6 0.1uF
BP7 0.1uF
BP8 0.1uF
C13 1uF
C14 1uF
C15 1uF
C16 1uF
DS2450S+
U18
AIN-A
AIN-B
AIN-C
AIN-D
DATA
NC
VCC
J6
R33 20ohms
R32 20ohms
C10 0.47uF
C9 0.47uF
Q4 2N3904
Q3 2N3904
U13 CD74HCT14M
R36 1Kohms
R35 1Kohms
R30 100ohms
R29 100ohms
SW4
SW3
U10 CD74HCT393M
U12 CD74HCT393M
U17 CD74HCT393M
J7
J8
DS2423P
U14
Vbat
DATA
IC-B
IC-A
4kbit 1-Wire RAM with Counter
U11 CD74HCT151M
U16 CD74HCT151M
R38 10Kohms
R39 10Kohms
R40 10Kohms
R41 10Kohms
R51 10Kohms
R50 10Kohms
R46 10Kohms
R49 10Kohms
U15 DS2408S
RSTZ
I/O
R37 100ohms
R34 100ohms
C12 0.001uF
C11 0.001uF
R42 2.26Kohms
R43 2.26Kohms
MODFIED 10/26/2006 8:46:17 AM
EED Department
ORIGINATOR M. Binkley DATE 9/21/2006
DRAWN T. Wesson DATE 9/21/2006
CHECKED checked DATE date
APPROVED approved DATE date
Fermi National Accelerator Laboratory
United States Department of Energy
C:\PPD_JOBS\RadMon_CTRL\RadMon_CTRL.prj
.RadMon Control Card Ckt B
SIZE D
DRAWING NUMBER 0000-ED-173617
Schematic Page 02 of 02
REV A
H=8ND, V=4LA