IFAE-Barcelona

30th october 2007

Selection of the inclusive $H \to b\bar{b}$ decay channel at CDF II

Stefano Camarda

CDF Padova Group

Universita` di Padova

INFN - Padova

Higgs Boson in the Standard Model

Electroweak gauge symmetry

$$SU(2)_L \otimes U(1)_Y$$

4 gauge bosons

W^+	W^-	Z	γ

Strong gauge symmetry

$$SU(3)_{\text{color}}$$

8 gauge bosons

$\mathcal{G}^a$ gluons

Higgs Boson in the Standard Model

Electroweak gauge symmetry

$$SU(2)_L \otimes U(1)_Y$$

Strong gauge symmetry

$$SU(3)_{\text{color}}$$

4 gauge bosons

W^+	W^-	Z	γ

$$i\bar{\psi}\gamma_\mu D_\mu \psi$$

8 gauge bosons

$$\mathcal{G}^a$$

gluons

$$i\bar{\psi}\gamma^\mu D_\mu \psi$$

6 leptons

e	μ	τ
ν_e	ν_μ	ν_τ

6 quarks

u (up)	c (charm)	t (top)(
d (down)	s (strange)	b (bottom)

Electroweak interaction

Strong interaction

It is not possible to insert mass terms in the Lagrangian without violating the gauge simmetry!

Higgs Boson in the Standard Model

Electroweak gauge symmetry

$$SU(2)_L \otimes U(1)_Y$$

4 gauge bosons

W^+	W^-	Z	γ

Strong gauge symmetry

$$SU(3)_{\text{color}}$$

8 gauge bosons

$\mathcal{G}^a$ gluons

6 leptons

e	μ	τ
ν_e	ν_μ	ν_τ

6 quarks

u (up)	c (charm)	t (top)(
d (down)	s (strange)	b (bottom)

Mass terms

H

Scalar field φ
Higgs Boson

Spontaneous symmetry breaking:

- wine bottle potential
- Vacuum expectation value

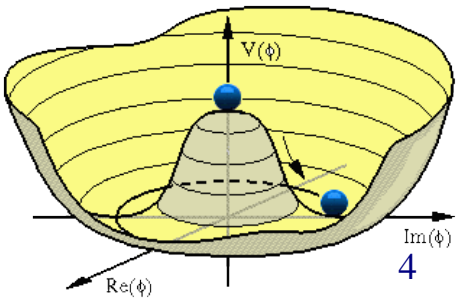

Higgs Boson in the Standard Model

Electroweak gauge symmetry

$$SU(2)_L \otimes U(1)_Y$$

4 gauge bosons

W^+	W^-	Z	γ

Strong gauge symmetry

$$SU(3)_{\text{color}}$$

8 gauge bosons

$\mathcal{G}^a$ gluons

6 leptons

e	μ	τ
ν_e	ν_μ	ν_τ

6 quarks

u (up)	c (charm)	t (top)(
d (down)	s (strange)	b (bottom)

Scalar field φ
Higgs Boson

Spontaneous symmetry breaking:
- wine bottle potential
- Vacuum expectation value

H →

- Scalar particle (spin 0)
- Mass interpretation
- Not yet observed

Mass limits of Higgs Boson

- Constraints from theoretical coherence

Unitarity of S matrix and vacuum stability

at the Grand Unified Theory (GUT) scale $\Lambda \sim 10^{16}$

- $130 < M_H < 180$ GeV/c^2

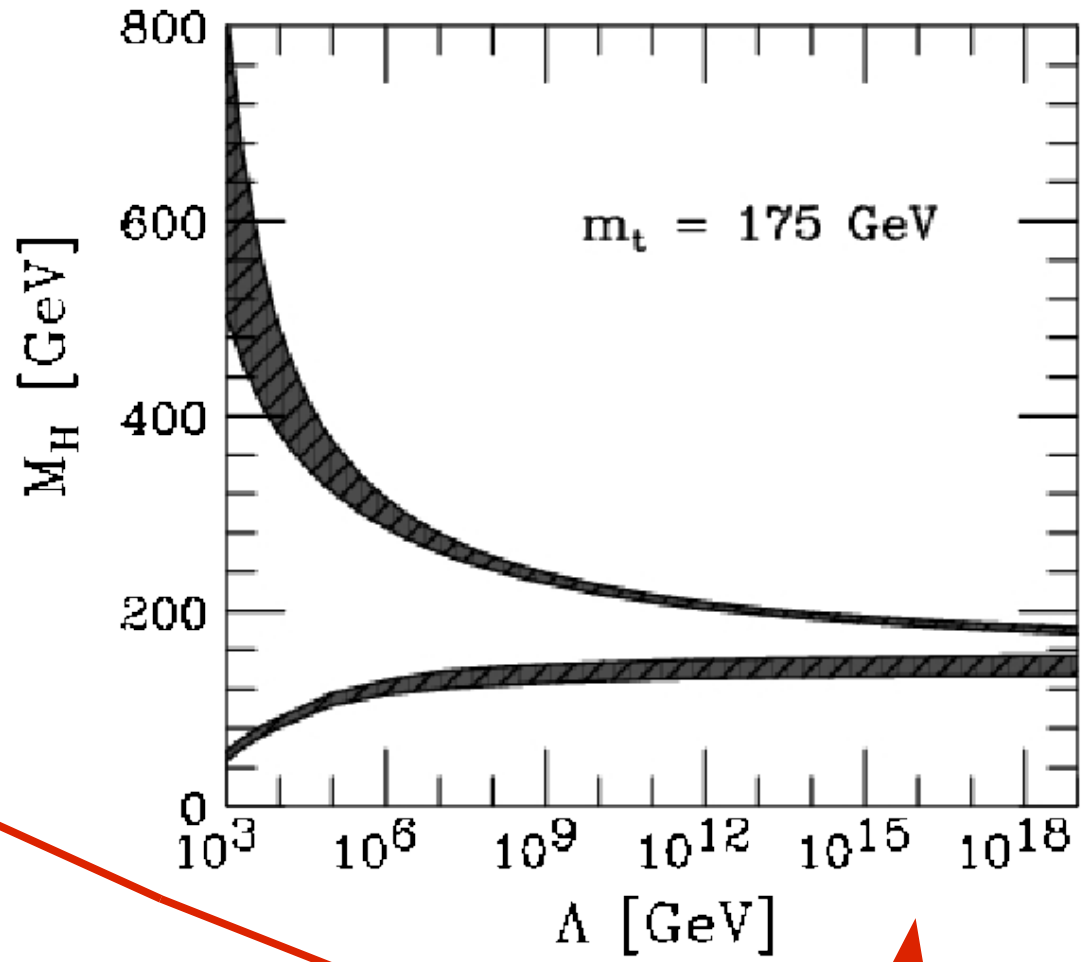

Mass limits of Higgs Boson

- Constraints from theoretical coherence

- Direct Search at LEP e^+e^- collider
  $M_H > 114.4$ GeV/c^2 95% CL

Mass limits of Higgs Boson

- Constraints from theoretical coherence
- Direct Search at LEP e^+e^- collider
  $M_H > 114.4$ GeV/c^2 95% CL
- Global fit of SM parameters
  $M_H = 76^{+33}_{-24}$ GeV/c^2
  $M_H < 144$ GeV/c^2 95% CL

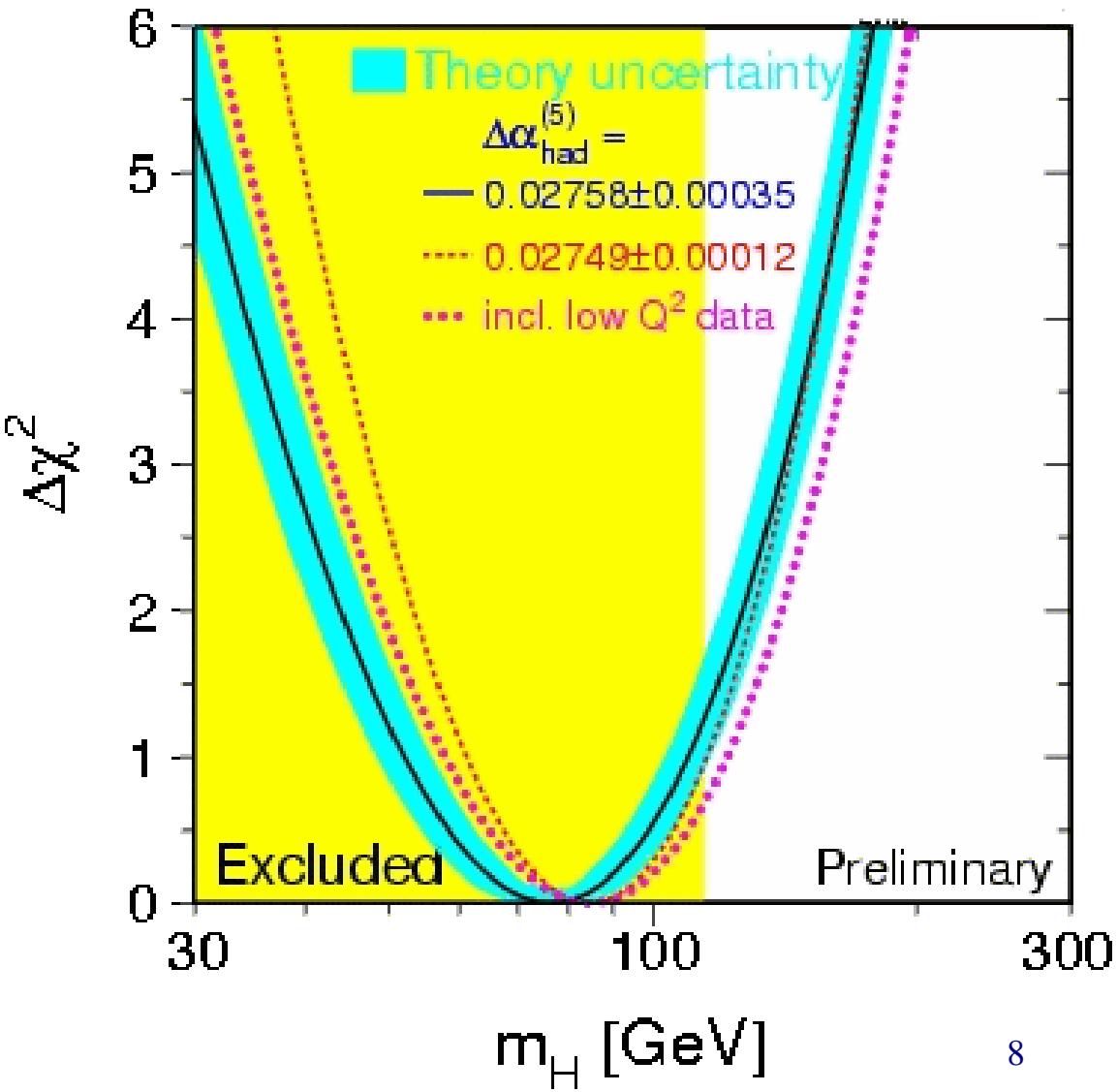

Mass limits of Higgs Boson

- Constraints from theoretical coherence
- Direct Search at LEP e^+e^- collider
  $M_H > 114.4$ GeV/c^2 95% CL
- Global fit of SM parameters
  $M_H = 76^{+33}_{-24}$ GeV/c^2
  $M_H < 144$ GeV/c^2 95% CL

$114.4 < M_H < 182$ Gev/c^2
95% CL

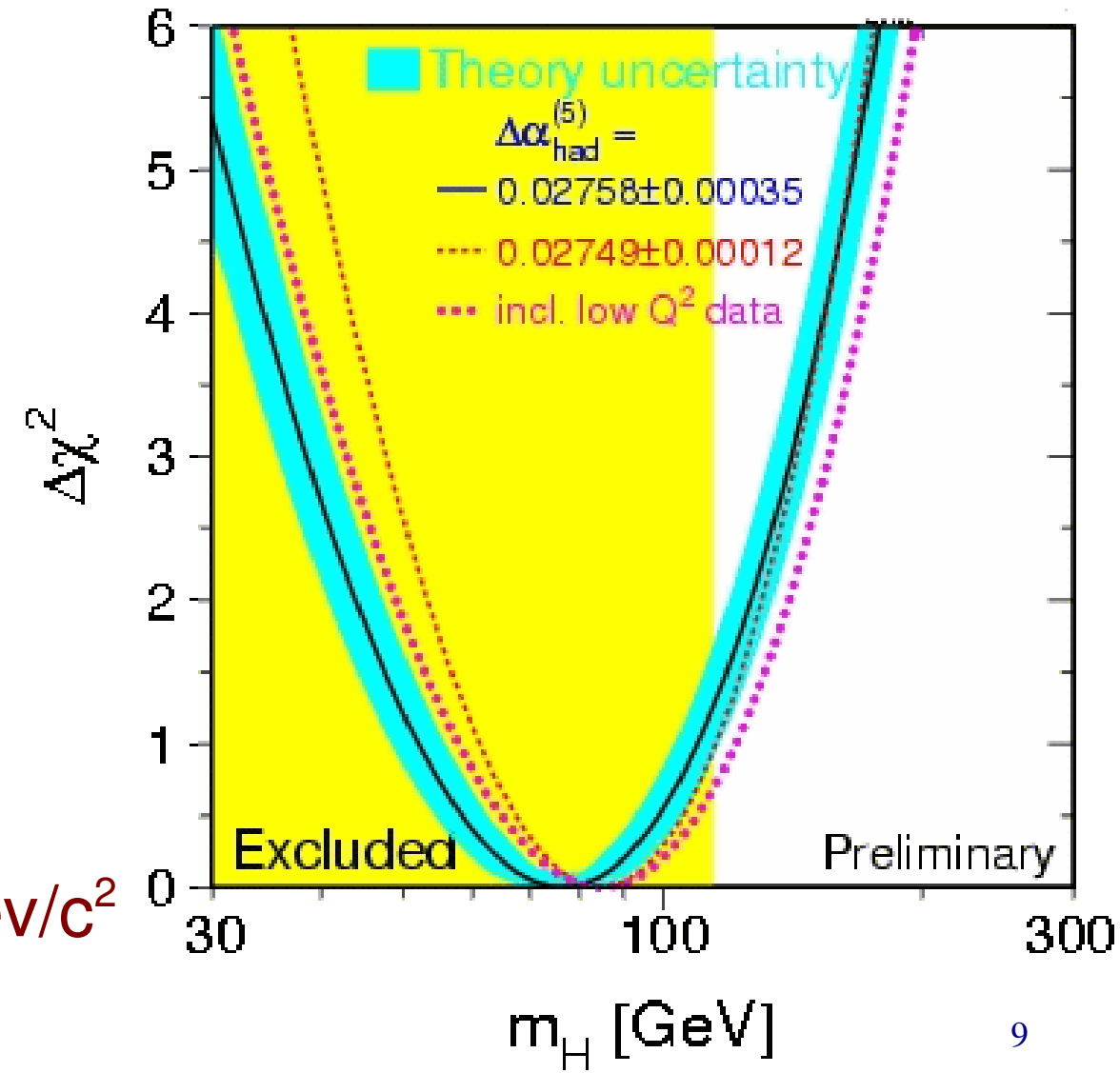

Collider $p\bar{p}$ Tevatron and CDF II detector

Circumference 6.3 Km

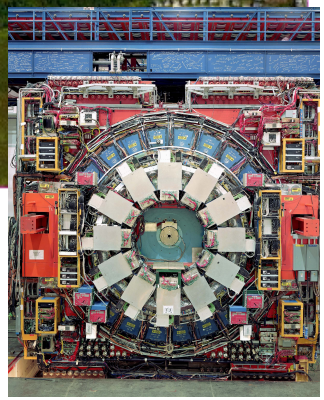

- Center of mass Energy: 1.96 TeV
- Maximum Luminosity: 3.2×10^{32} cm^{-2} s^{-1}
- Time between bunch crossings: 396 ns

Collider
Detector at
Fermilab

- Quark top discovery (1994)
- B_s Oscillations
- Precise determination of M_t e M_W

CDF II Detector

Reference frame

Cartesian:
z along beam axis
x-y transverse plane

Polar:
ϕ azimuthal angle
θ polar angle

Pseudorapidity:
$\eta = -\ln(\tan(\theta/2))$

Longitudinal rapidity of a massless particle travelling along θ direction

Additive under longitudinal Lorentz boosts

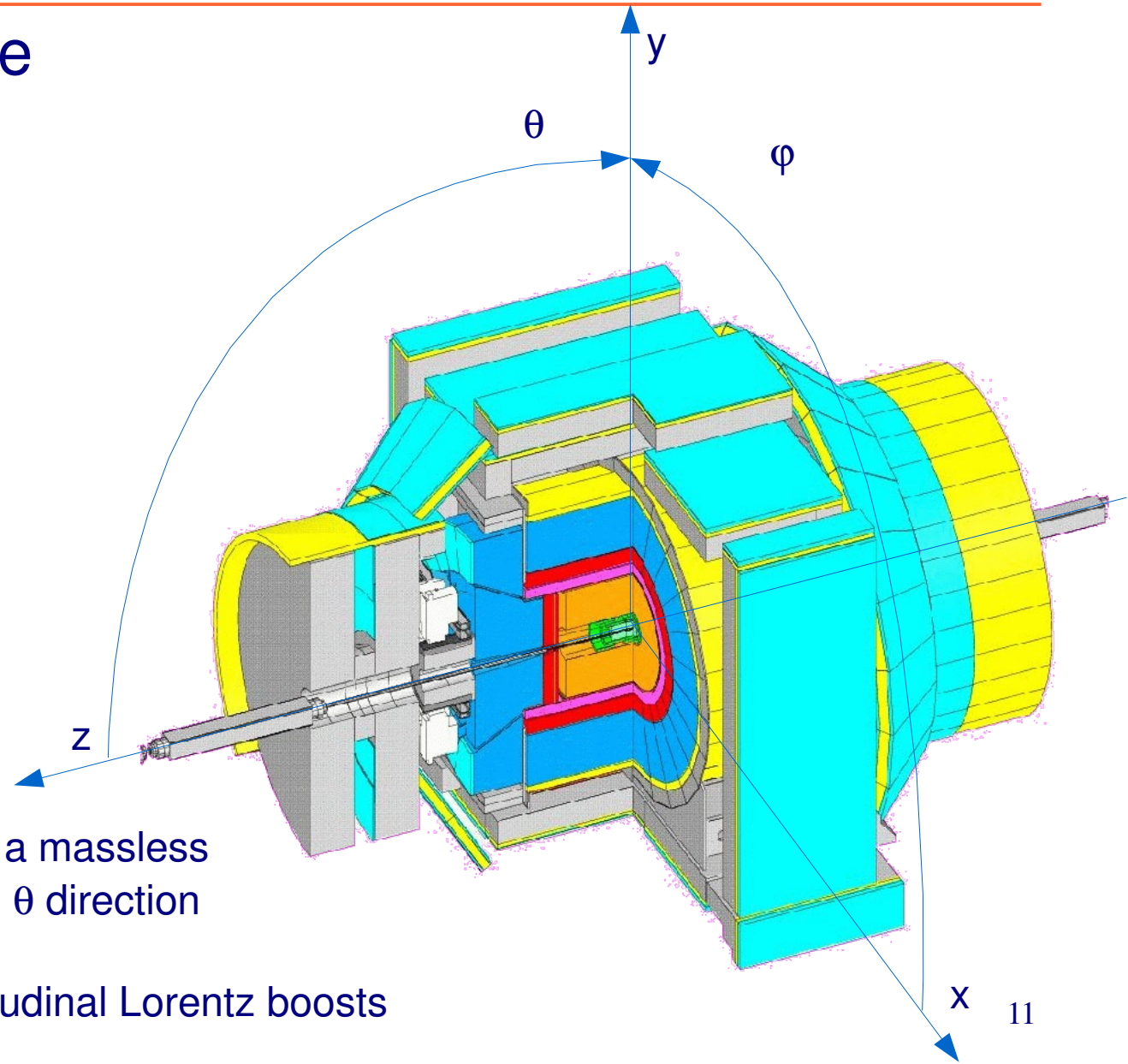

CDF II Detector

- Tracking system
  - Silicon detectors
  - Drift chambers COT
- Superconducting magnets
  - Magnetic field 1.4 T
- Calorimetric systems
  - Elettromagnetic calorimetrs
  - Hadronic calorimetrs
- Muon detectors
  - Drift chambers
  - Scintillator counters

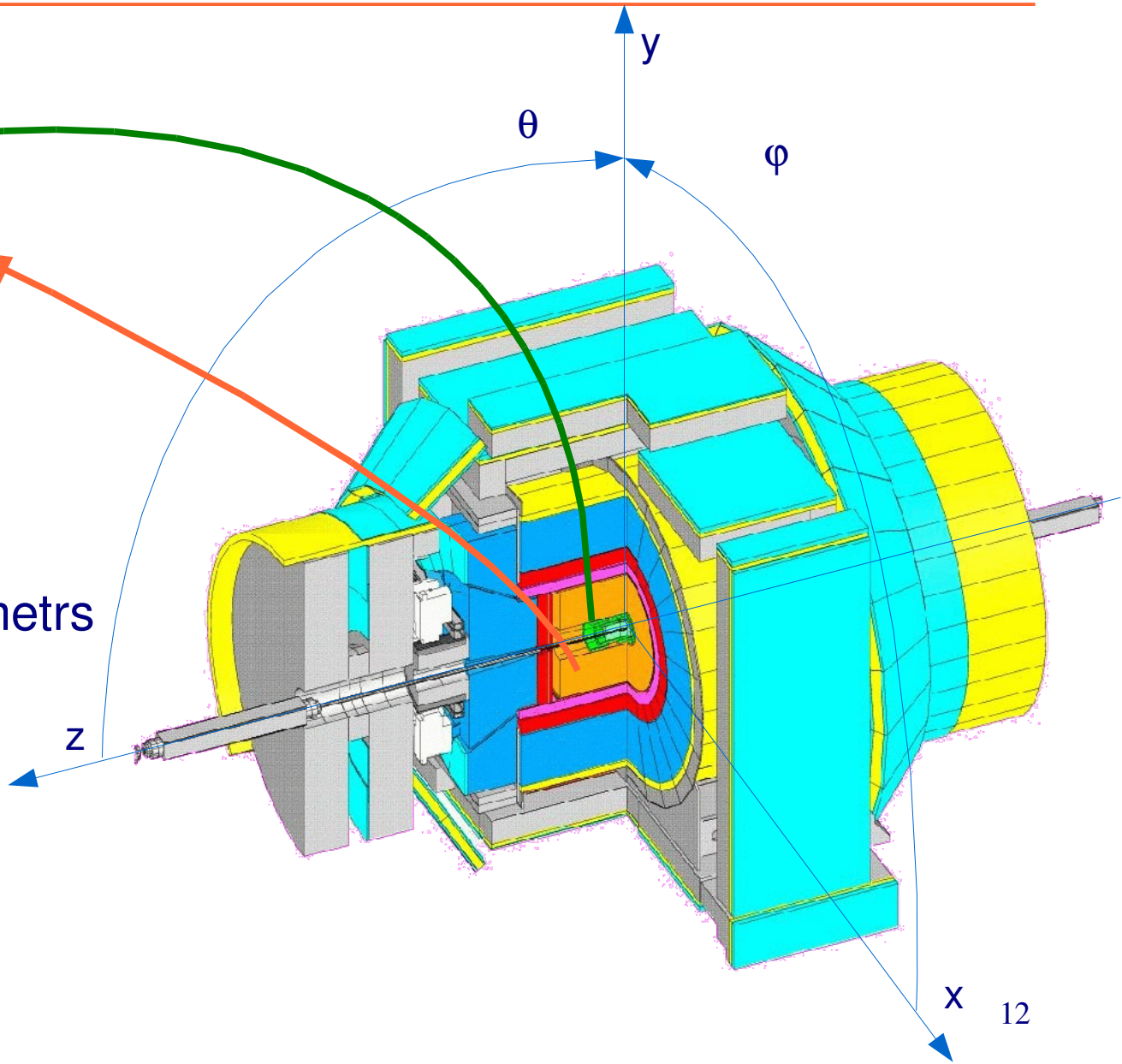

CDF II Detector

- Tracking system
  - Silicon detectors
  - Drift chambers COT
- Superconducting magnets
  - Magnetic field 1.4 T
- Calorimetric systems
  - Elettromagnetic calorimetrs
  - Hadronic calorimetrs
- Muon detectors
  - Drift chambers
  - Scintillator counters

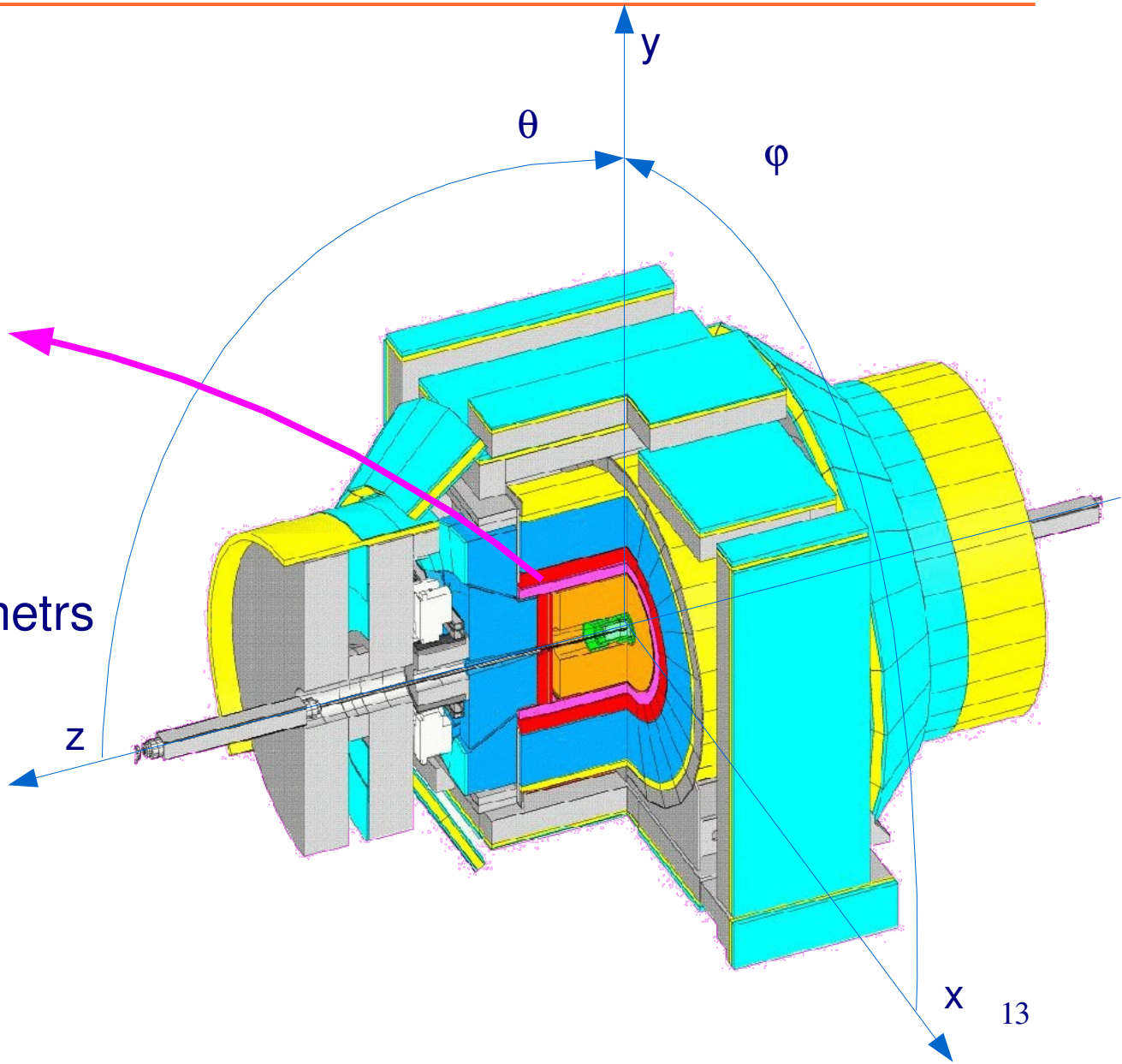

CDF II Detector

- Tracking system
  - Silicon detectors
  - Drift chambers COT
- Superconducting magnets
  - Magnetic field 1.4 T
- Calorimetric systems
  - Elettromagnetic calorimetrs
  - Hadronic calorimetrs
- Muon detectors
  - Drift chambers
  - Scintillator counters

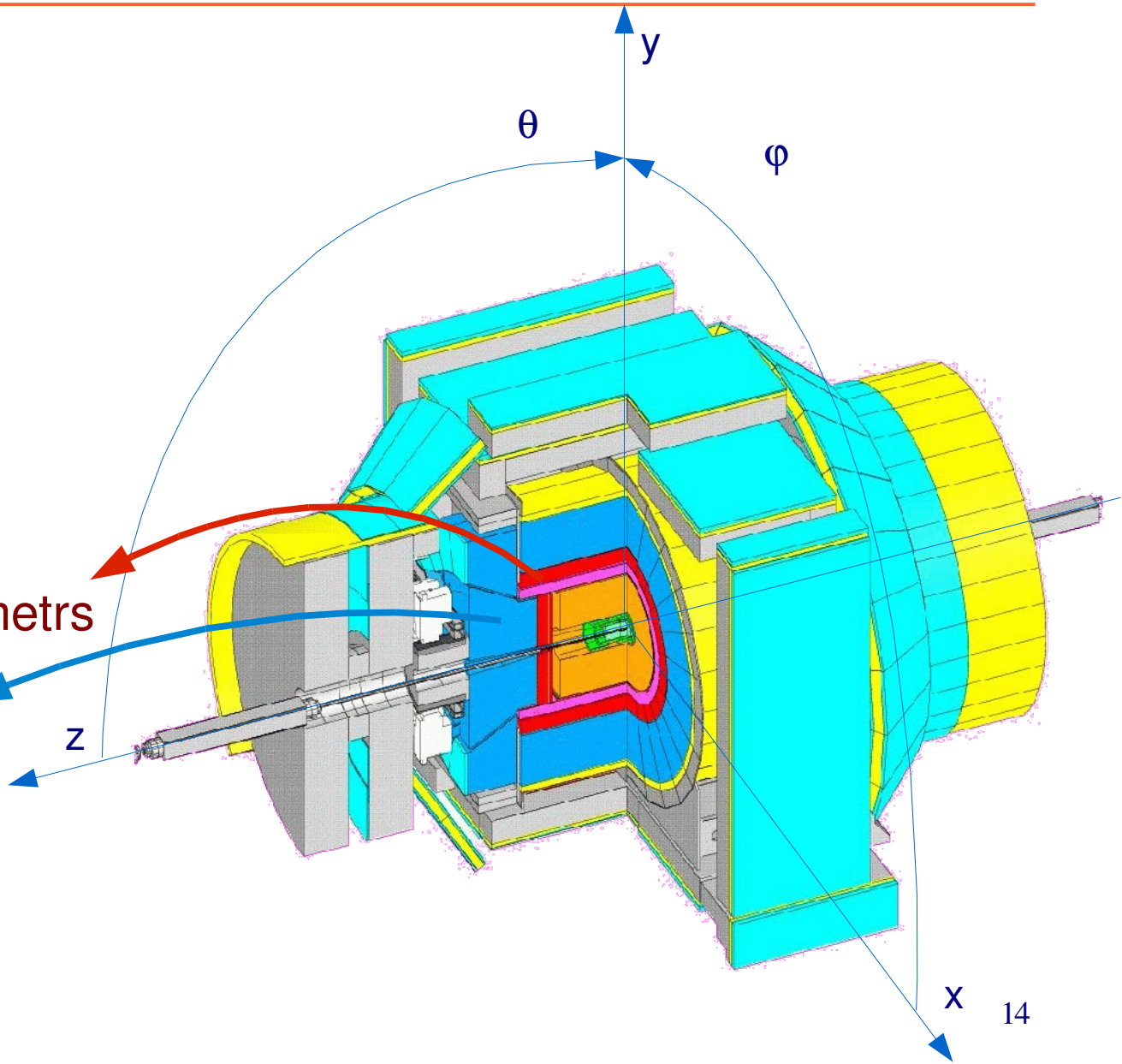

CDF II Detector

- Tracking system
  - Silicon detectors
  - Drift chambers COT
- Superconducting magnets
  - Magnetic field 1.4 T
- Calorimetric systems
  - Elettromagnetic calorimetrs
  - Hadronic calorimetrs
- Muon detectors
  - Drift chambers
  - Scintillator counters

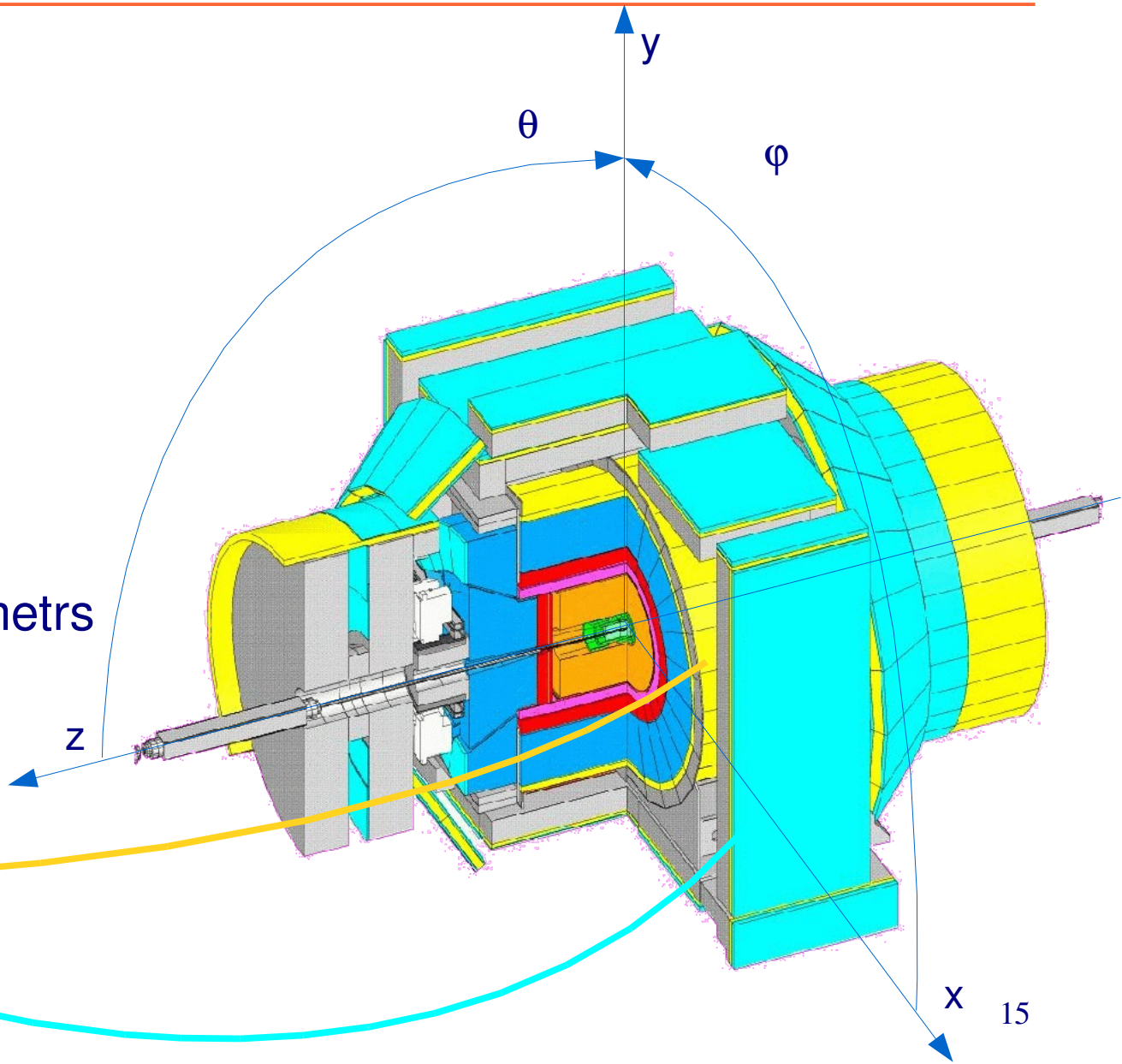

Higgs production at Tevatron

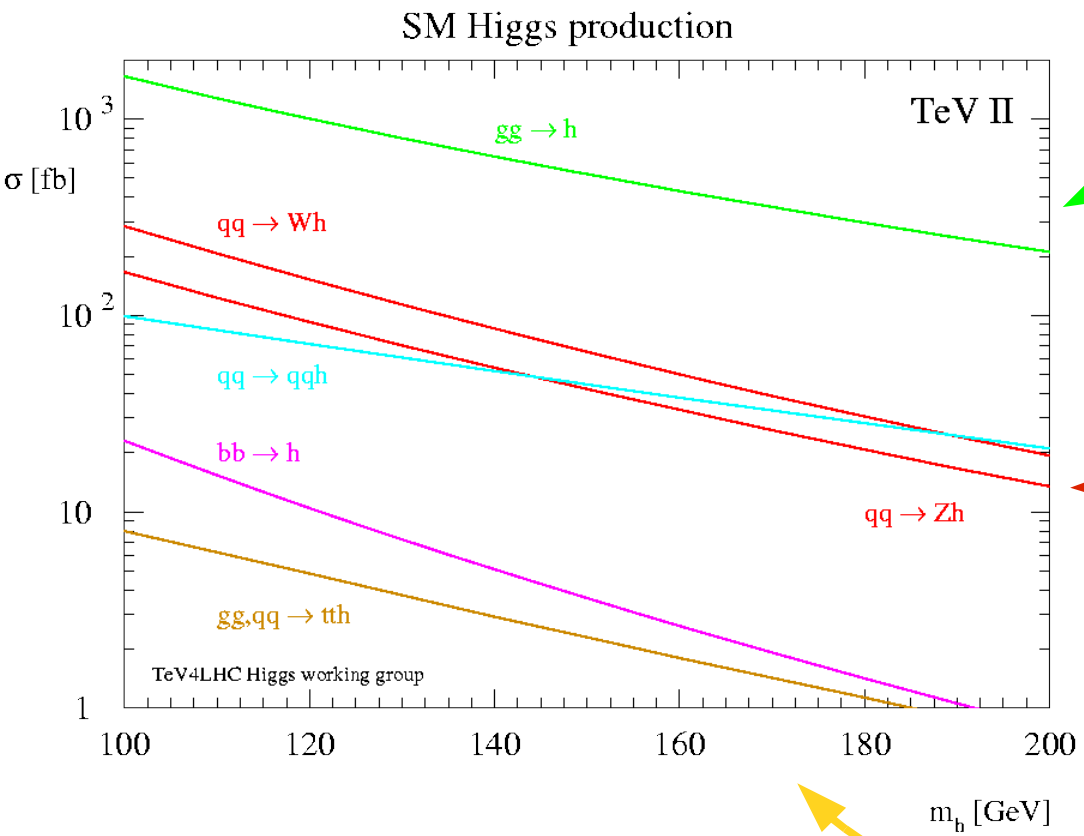

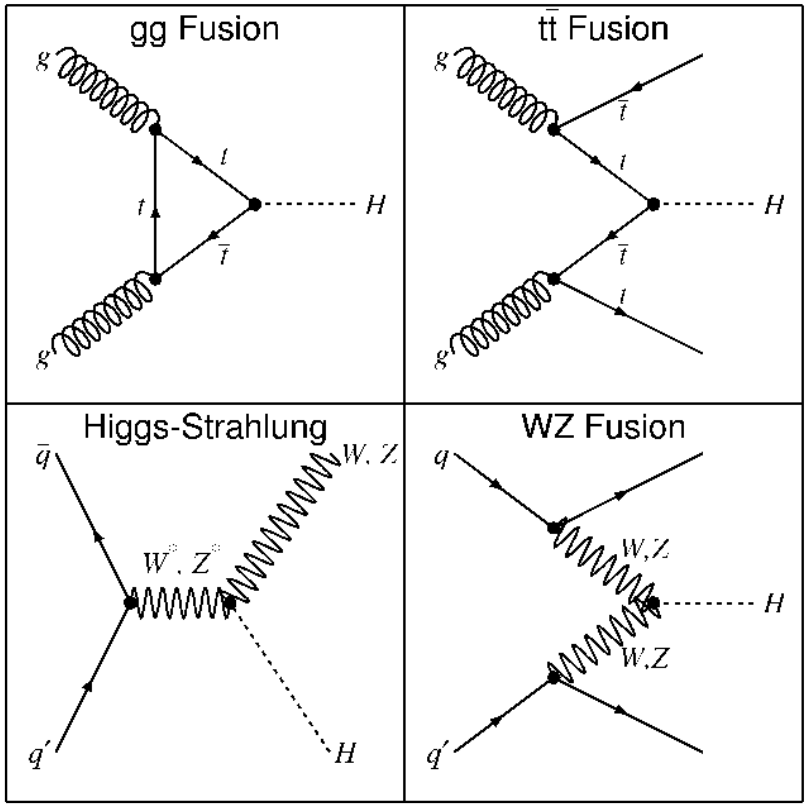

Gluon fusion is the most probable process,
but it has only a Higgs Boson in the final state

No signature from other particles

Higgs decay modes

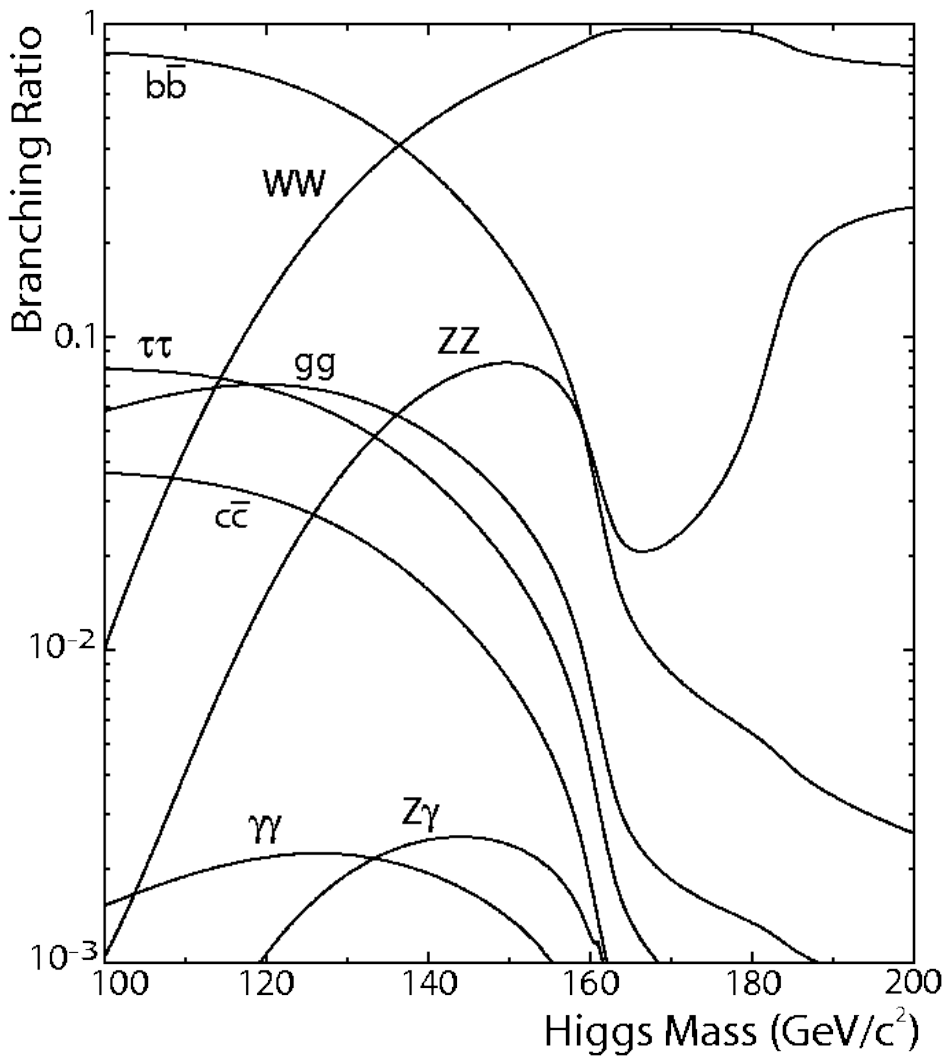

High mass region

$M_{Higgs} \geq 135$ GeV

Main decay mode: $H \rightarrow WW$

Low mass region

$M_{Higgs} \leq 135$ GeV

Main decay mode: $H \rightarrow b\bar{b}$

Hunting Higgs in the low mass region

Decay channel: $H \rightarrow b\bar{b}$ → Large background from $b\bar{b}$ direct production

$\sigma_{bb} \sim 10^4\ \sigma_H$

$M_H = 120\ GeV/c^2$

$BR(H \rightarrow b\bar{b}) = 0.68$

Production processes

Higgs-strahlung

$qq \rightarrow WH \quad \sigma = 0.15\ pb$

$qq \rightarrow ZH \quad \sigma = 0.09\ pb$

gluon fusion

$gg \rightarrow H \quad \sigma = 1\ pb$

Hunting Higgs in the low mass region

Decay channel: $H \rightarrow b\bar{b}$

$M_H = 120\ GeV/c^2$

$BR(H \rightarrow b\bar{b}) = 0.68$

Large background from $b\bar{b}$ direct production

$\sigma_{bb} \sim 10^4\ \sigma_H$

Production processes

Higgs-strahlung

$qq \rightarrow WH \quad \sigma = 0.15\ pb$

$qq \rightarrow ZH \quad \sigma = 0.09\ pb$

Less probable channels, but with clear signature from the leptonic decay of vector bosons:

$W \rightarrow l\nu$

$Z \rightarrow ll, \nu\nu$

Process so far investigated

gluon fusion

$gg \rightarrow H \quad \sigma = 1\ pb$

Most probable channel, but difficult to distinguish signal from background

Processes not yet investigated

Hunting Higgs in the low mass region

Decay channel: $H \rightarrow b\bar{b}$

$M_H = 120\ GeV/c^2$

$BR(H \rightarrow b\bar{b}) = 0.68$

Large background from $b\bar{b}$ direct production

$\sigma_{bb} \sim 10^4\ \sigma_H$

Production processes

Higgs-strahlung

$qq \rightarrow WH \quad \sigma = 0.15\ pb$

$qq \rightarrow ZH \quad \sigma = 0.09\ pb$

Proposed channel:
$H \rightarrow b\bar{b}$ inclusive
i. e. independent from production process

gluon fusion

$gg \rightarrow H \quad \sigma = 1\ pb$

Less probable channels, but with clear signature from the leptonic decay of vector bosons:

$W \rightarrow l\nu$

$Z \rightarrow ll, \nu\nu$

Process so far investigated

Most probable channel, but difficult to distinguish signal from background

Processes not yet investigated

The bb background

Ref. R.D. Field, CDF Note 5813

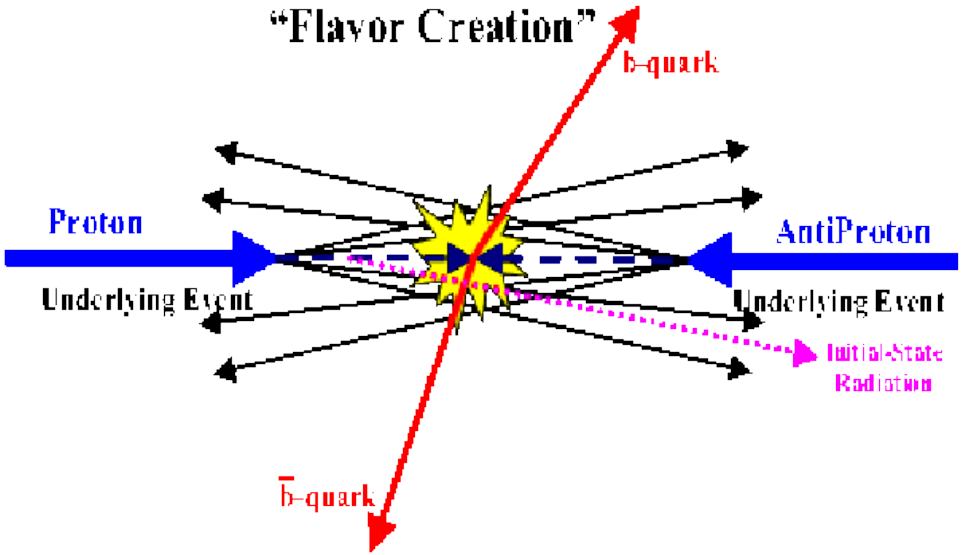

$b\bar{b}$ couples originating directly from the hard-scattering

$gg \rightarrow b\bar{b}$
$qq \rightarrow b\bar{b}$

Main Background in the Higgs kinematic region

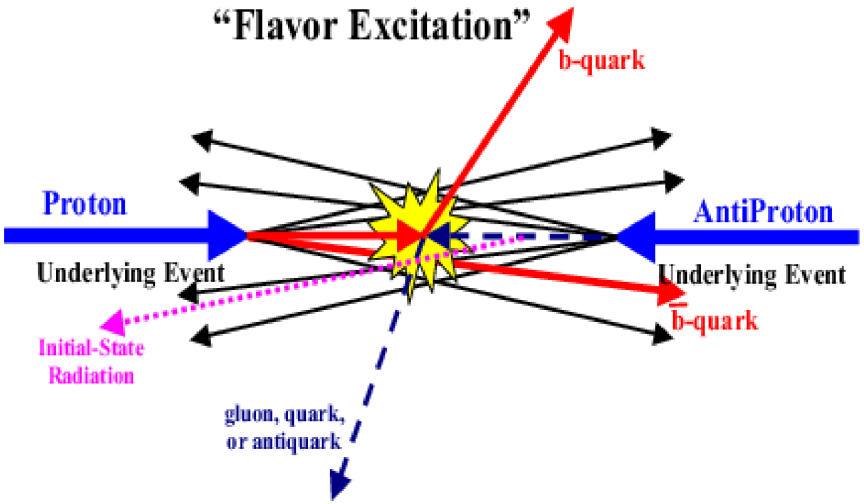

Scattering of a b quark out of the initial state into the final state

$gb \rightarrow gb$
$qb \rightarrow qb$

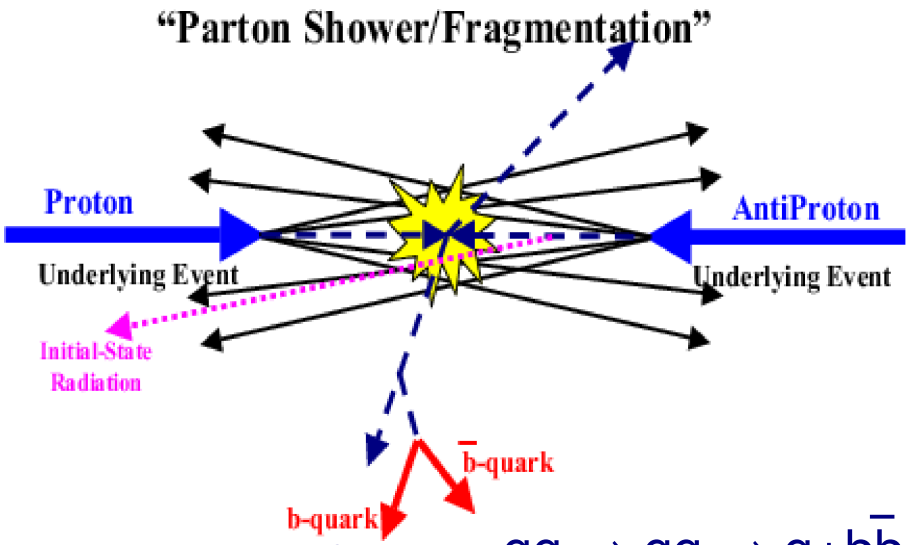

bb couples coming from the hadronization process

$gg \rightarrow gg \rightarrow g+b\bar{b}$

Sample selection

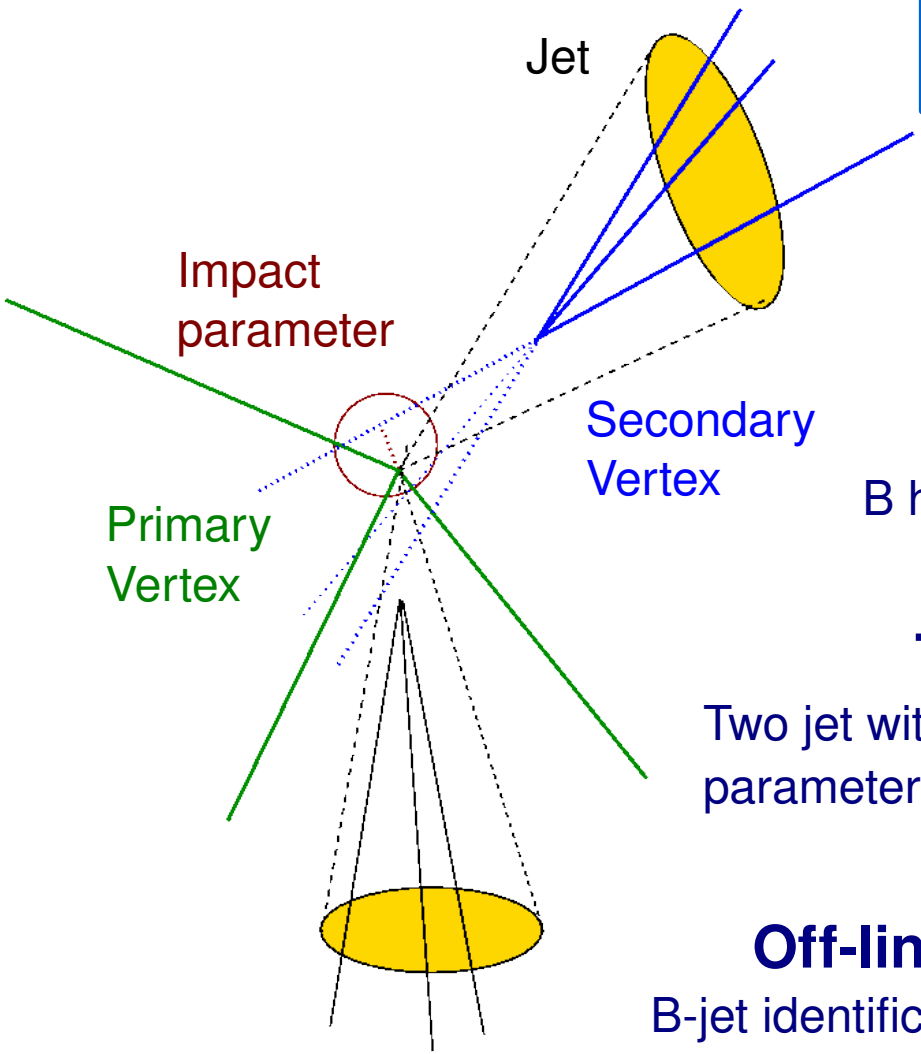

Selection of events with two b-jet of High transverse Energy in the final state

Jet is a collection of particles originated during the hadronization process
Jet's axis coincides with the direction of the parton coming from the hard-scattering process

B hadrons
- Mean lifetime: $\tau \sim 1$ ps
- Decay length: $L \sim 1$ mm
- Secondary Vertex

Trigger requirements

Two jet with at least one track whose impact parameter is > 120 μm: one track for every jet

Off-line requirements

B-jet identification by mean of a Secondary Vertex reconstruction

Number of events in the Selected sample

$N_B \sim 532'000$

Expected signal events

Expected events $N_S = \sigma \cdot \varepsilon \cdot L$

$M_H = 120\ GeV/c^2$

Cross section $gg \rightarrow H \rightarrow b\bar{b}$: $\sigma = 0.68$ pb

Efficiency of Trigger and off-line selection, evaluated by mean of Monte Carlo simulation (Pythia) $\varepsilon = 3.17\%$

Sample integrated luminosity $L = 1.15\ fb^{-1}$

$N_S \sim 25$ events

Statistical significance of the selected sample:

$$N_S/\sqrt{(N_B)} \sim 1/29$$

Sample composition

Secondary vertex invariant mass

Identification

Types of jet in the selected data sample

- b quark
- c quark
- light quarks (u, d, s) and gluons

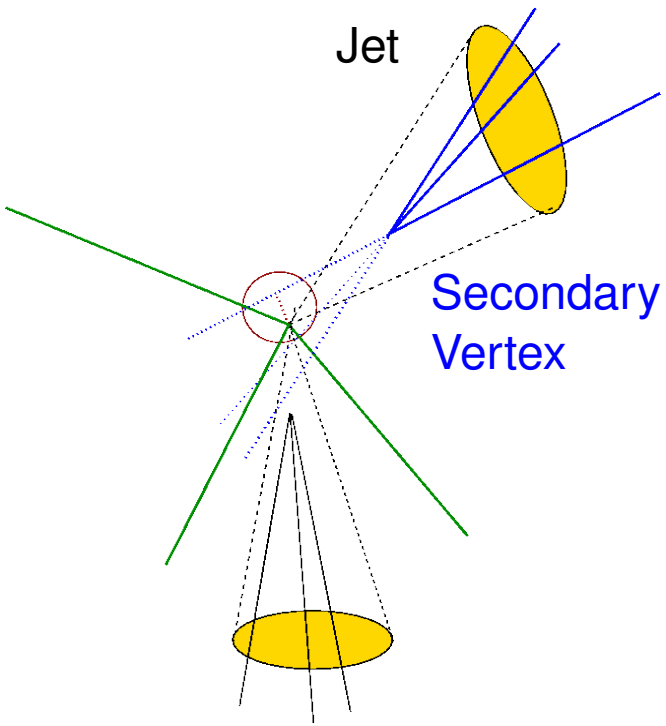

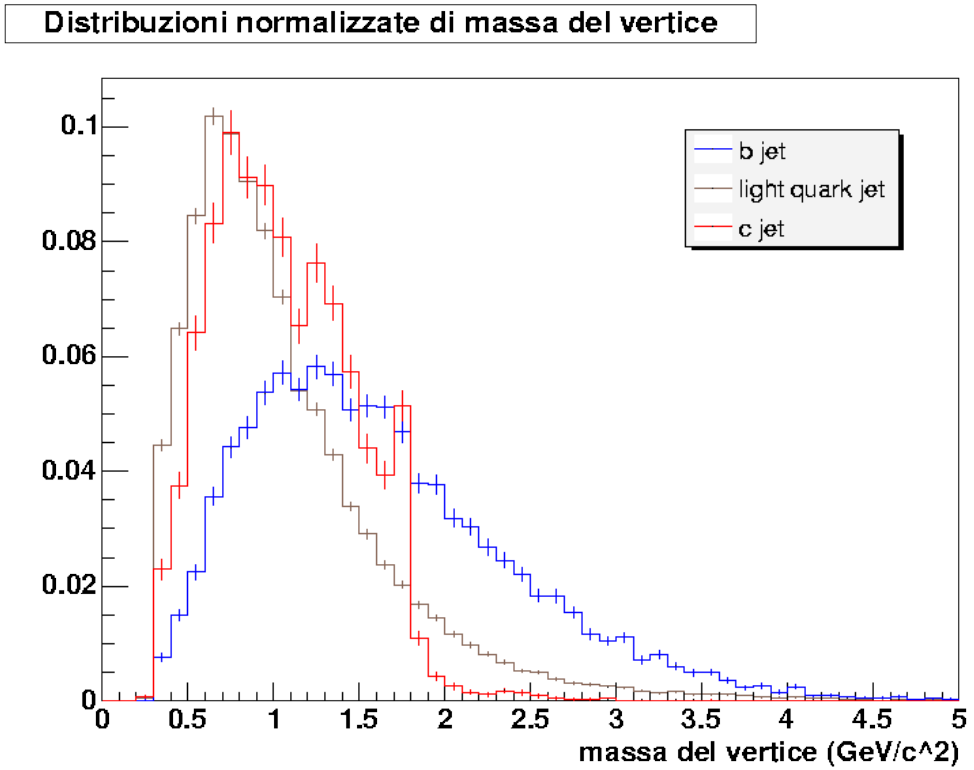

Monte Carlo templates used to fit the selected data sample

Sample composition - results

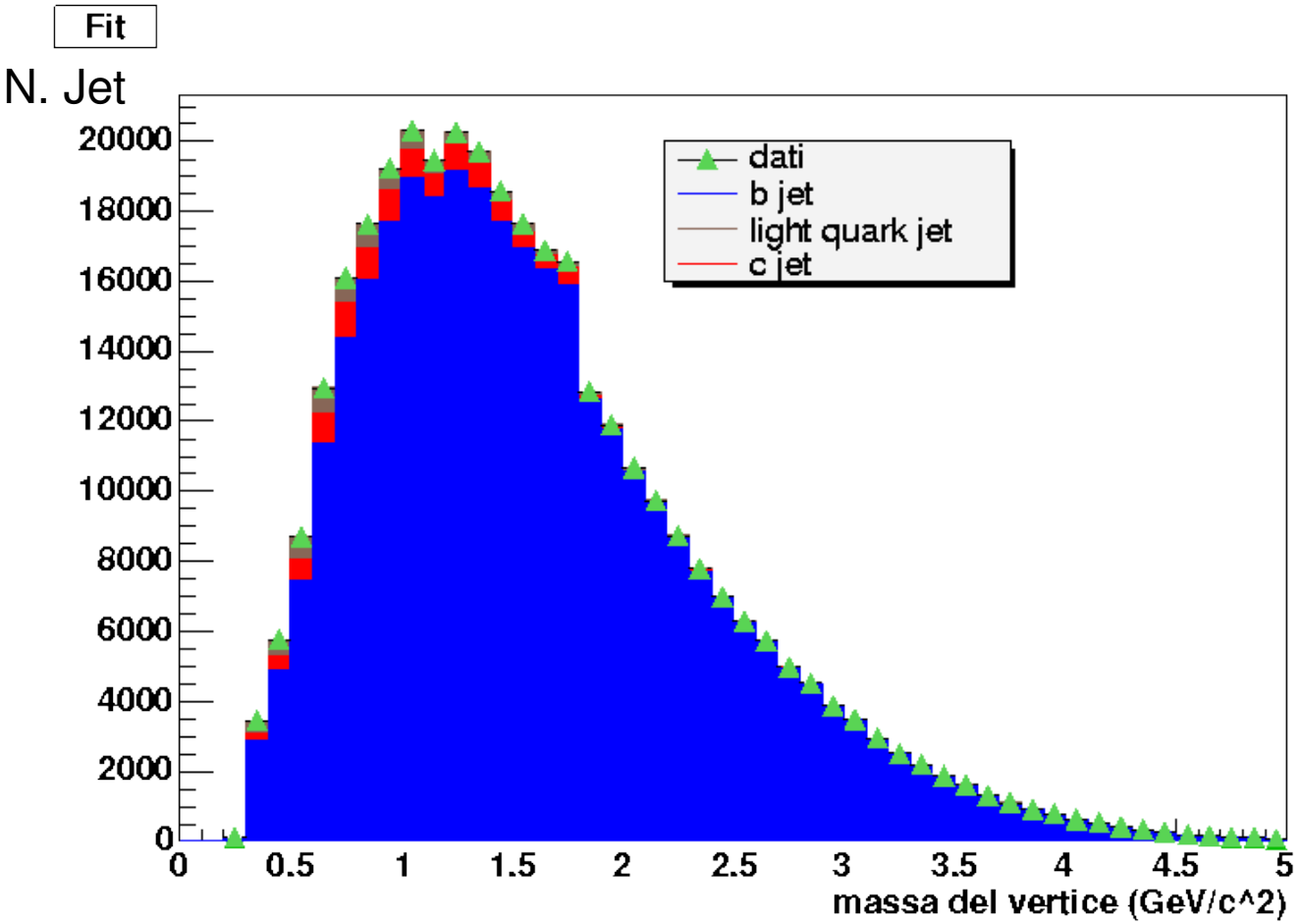

Maximum likelyhood fit

Fraction Fit: MC templates are varied within statistical errors

$$\chi^2/n.d.f. = 49/47$$

Results of the sample composition fit

Fraction of $b\bar{b}$ couples

$\boxed{0.90 \pm 0.02}$

Searching for discriminating variables

The main background consists of $b\bar{b}$ couples

Obtain the better **distinction of signal from the main background**

Analysis of discriminating variables

Searching for differences between signal and background templates

Monte Carlo simulation - Pythia

signal: $H \rightarrow b\bar{b}$ (M_H = 120 GeV/c^2)

background: direct production of $b\bar{b}$ couples

Searching for discriminating variables

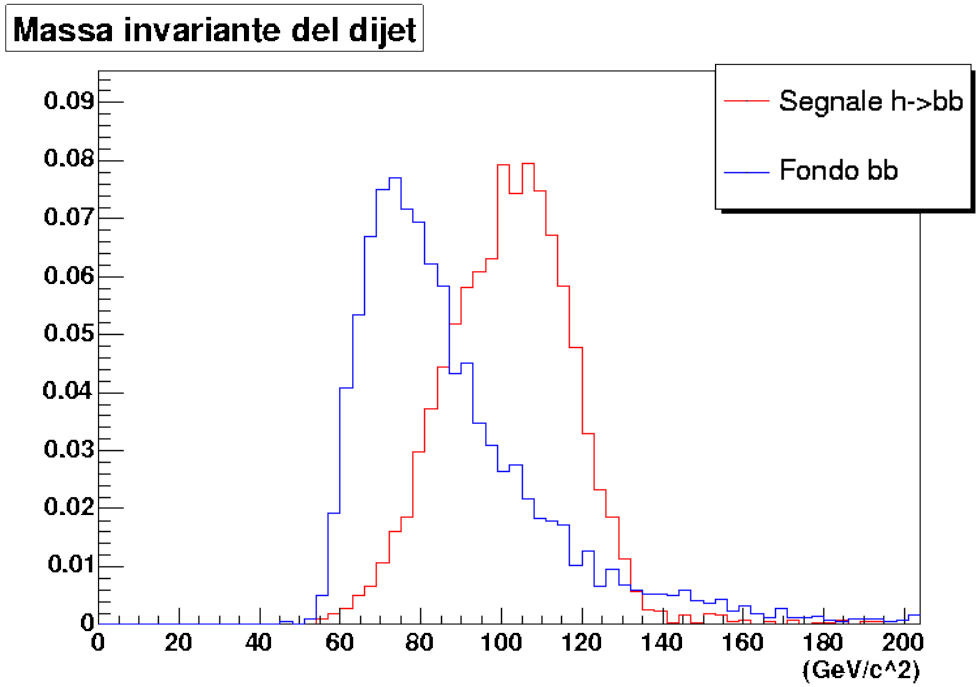

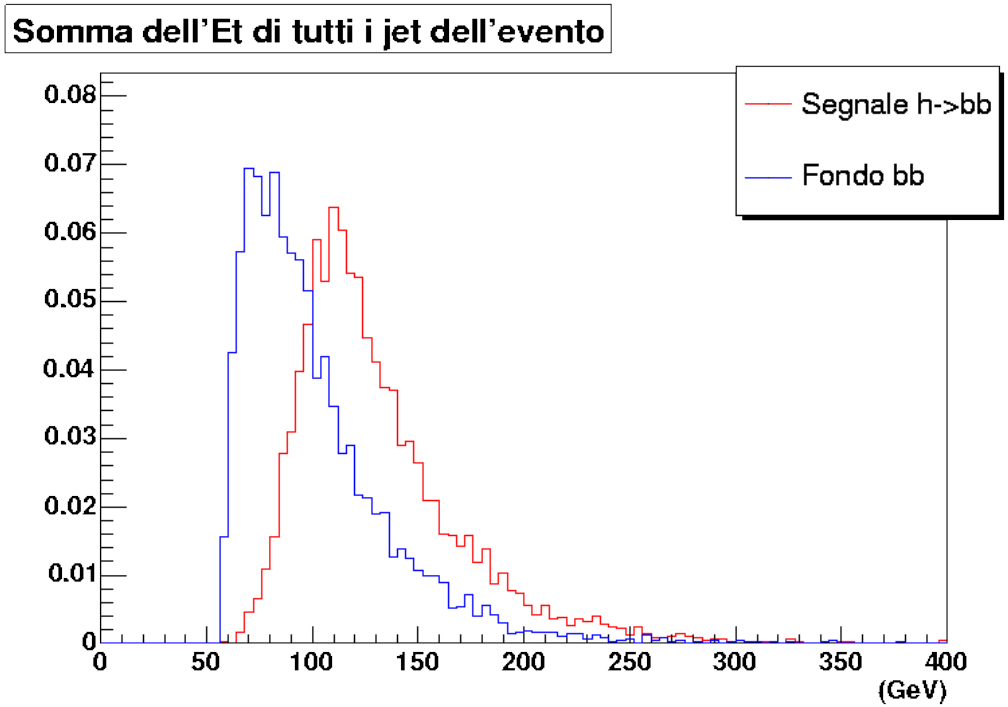

Resonance in the invariant mass spectrum

Radiation in the transverse plane

Searching for discriminating variables

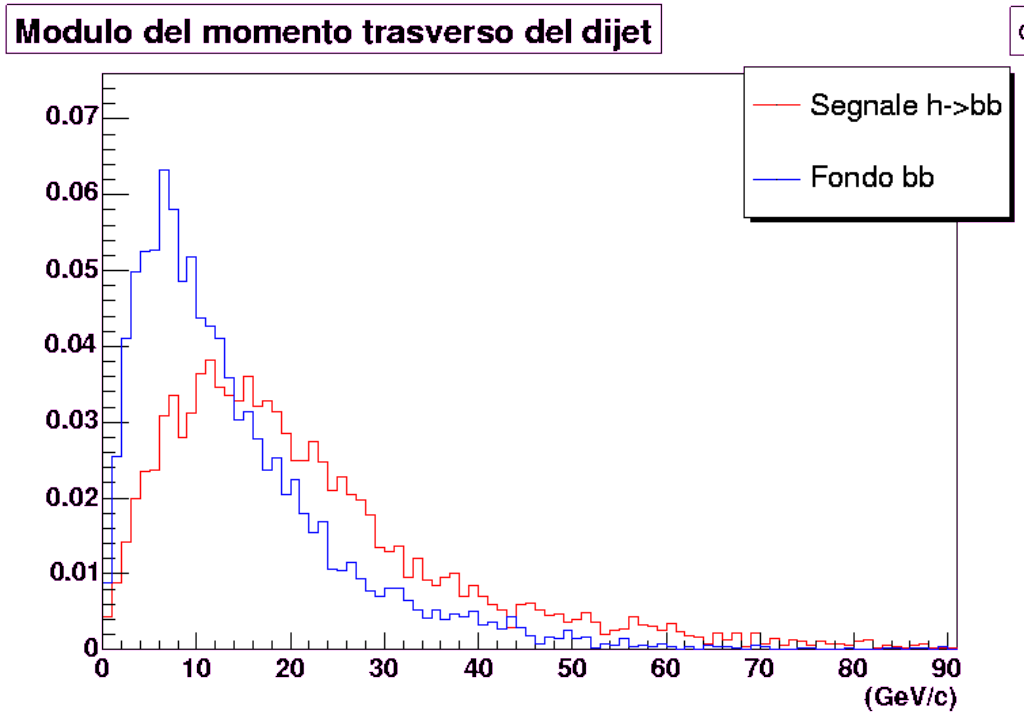

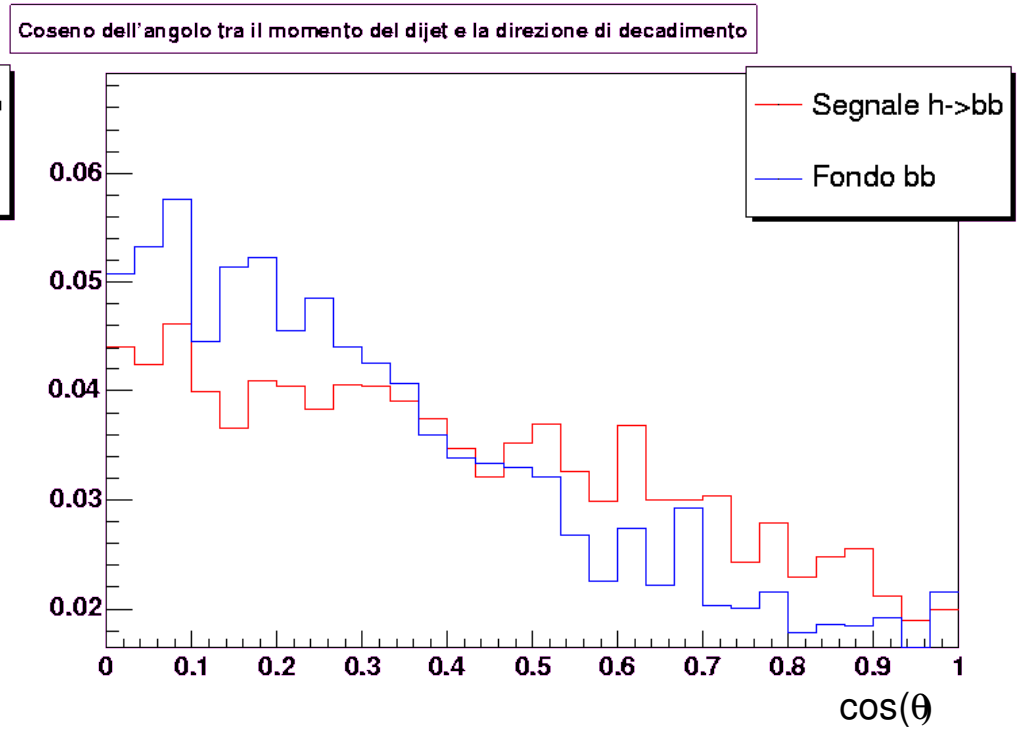

Radiative corrections

Scalar particle spinless: isotropic decay

Selection with Neural Networks

Artificial Neural Networks

Developed in the A.I. research
Classification algorithms

Mathematical approach:

- Continuous functional mapping
- Classifying hyper-planes in multi-variables space

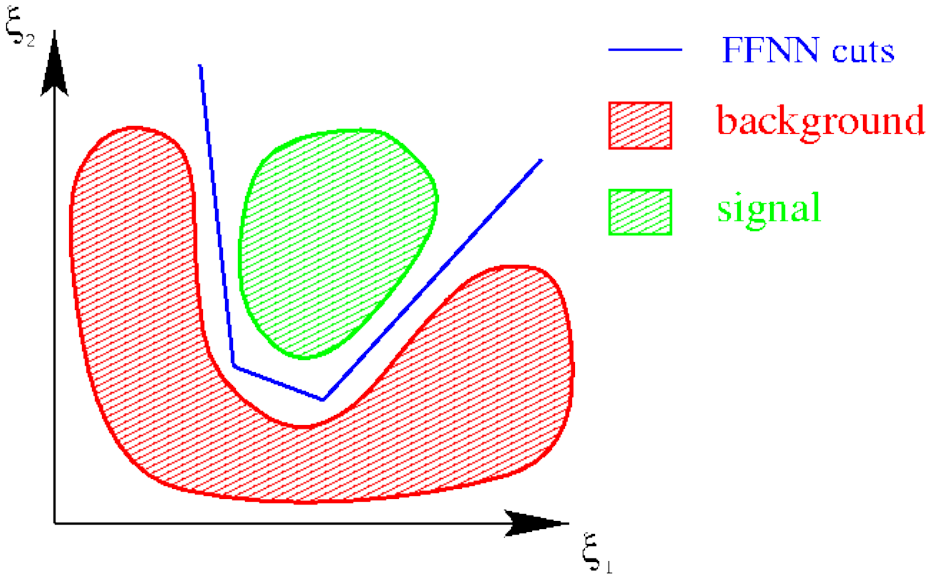

output of Neural Network
0 → background event
1 → signal event

probability of signal event

Selection with Neural Networks

Transfer function:

$$NN_{output} = F(\vec{\xi}, \omega_{ij}, \theta_i)$$

Input variables

parameters

The right values of parameters for the specific classification problem are set by mean of a **training** algorithm

Train sample of Monte Carlo events

Set → { background 0 ; signal 1 }

Parameters are varied to minimize an **error function** evaluated on the train sample

NN Structure

Neurons → threshold θ_i

Synapses → weight ω_{ij}

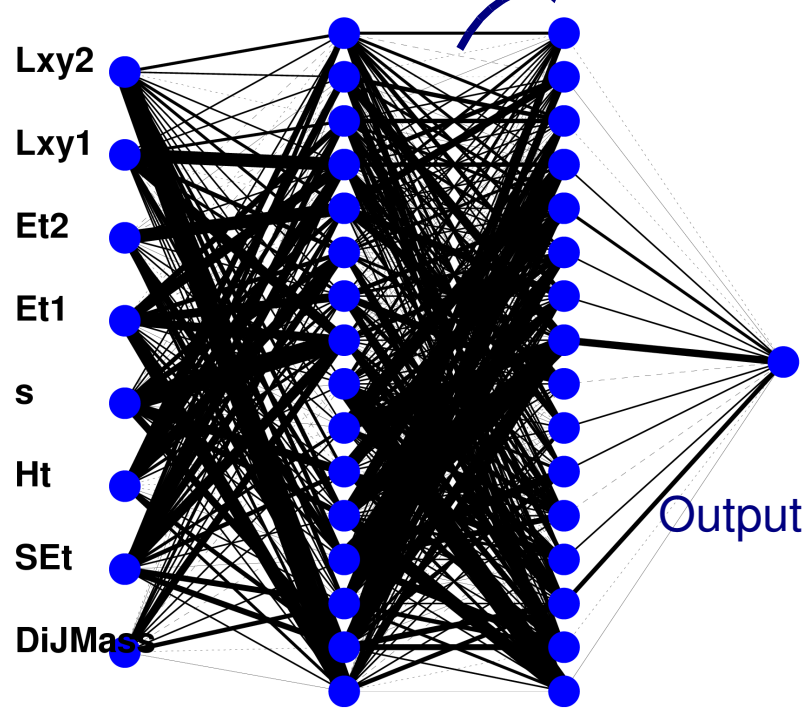

Output neuron

Input layer

Hidden layers

Results

1st Approach

Selection on variables low correlated to invariant mass

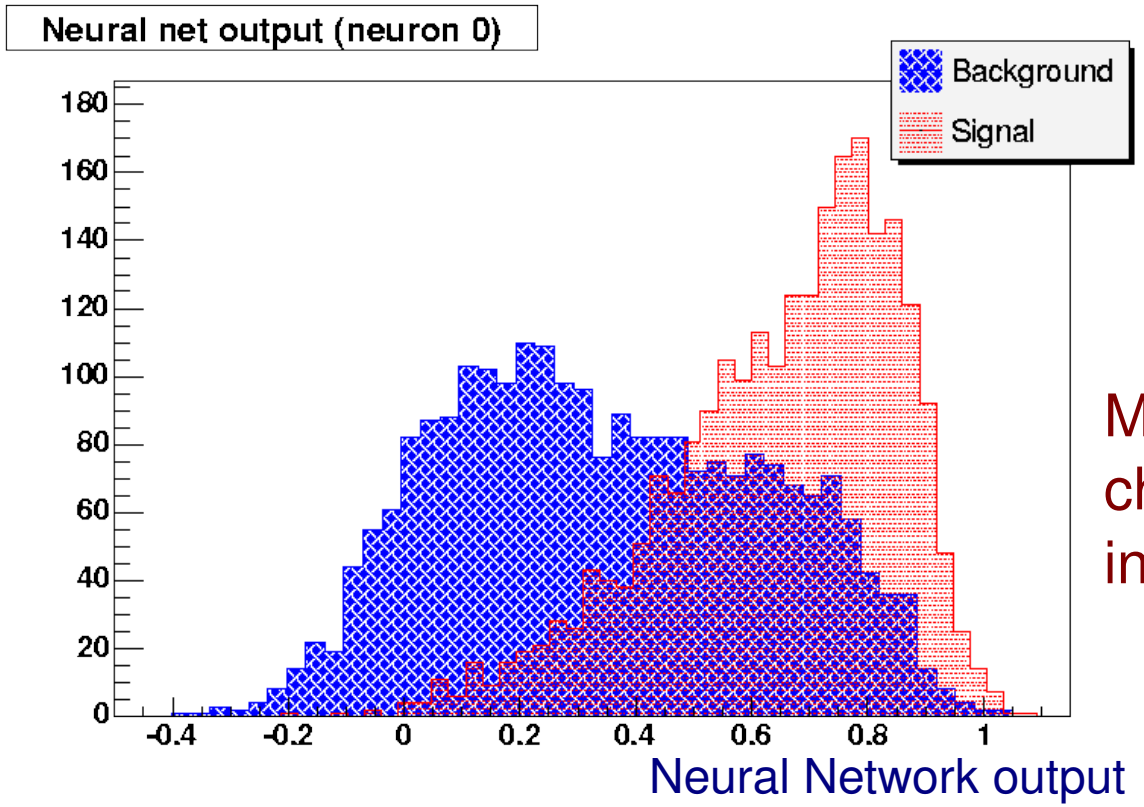

Mass spectrum slightly affected by the NN selection

Maximum significance with the change of a cut on NN output in the invariant mass interval 90-130 Gev/c^2

1/21

Subsequent analysis:
Fit the invariant mass spectrum

Results

2nd Approach

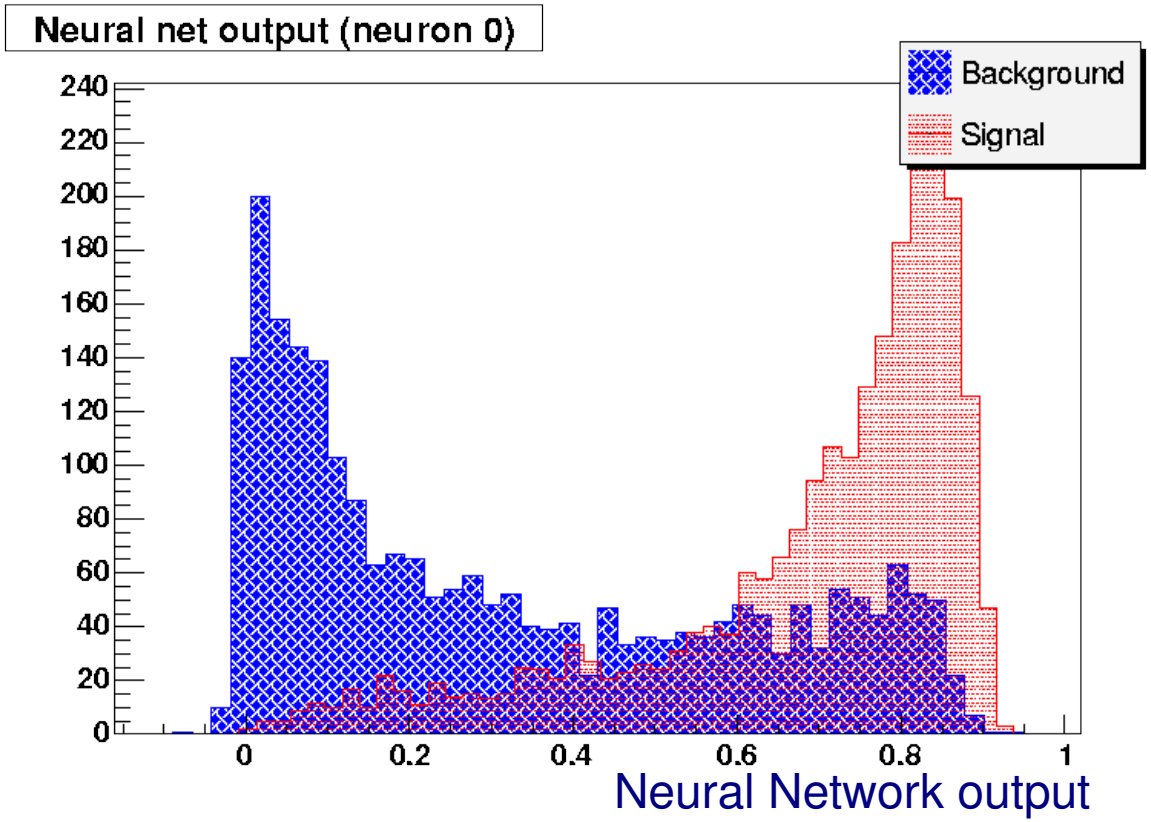

Selection on all variables

Better selection, but mass spectrum is altered

Maximum significance with the change of a cut on neural network output

1/20

Subsequent analysis:
Fit the NN output template

Prospects

Promising results

Subsequent analysis: fit procedure

Further improvements

- NN based continuous roman b-tag
- Improvement of b-jet acceptance
- Improvement in jet energy resolution and hence in invariant mass resolution
- New triggers for the $H \rightarrow b\bar{b}$ channel

Conclusion

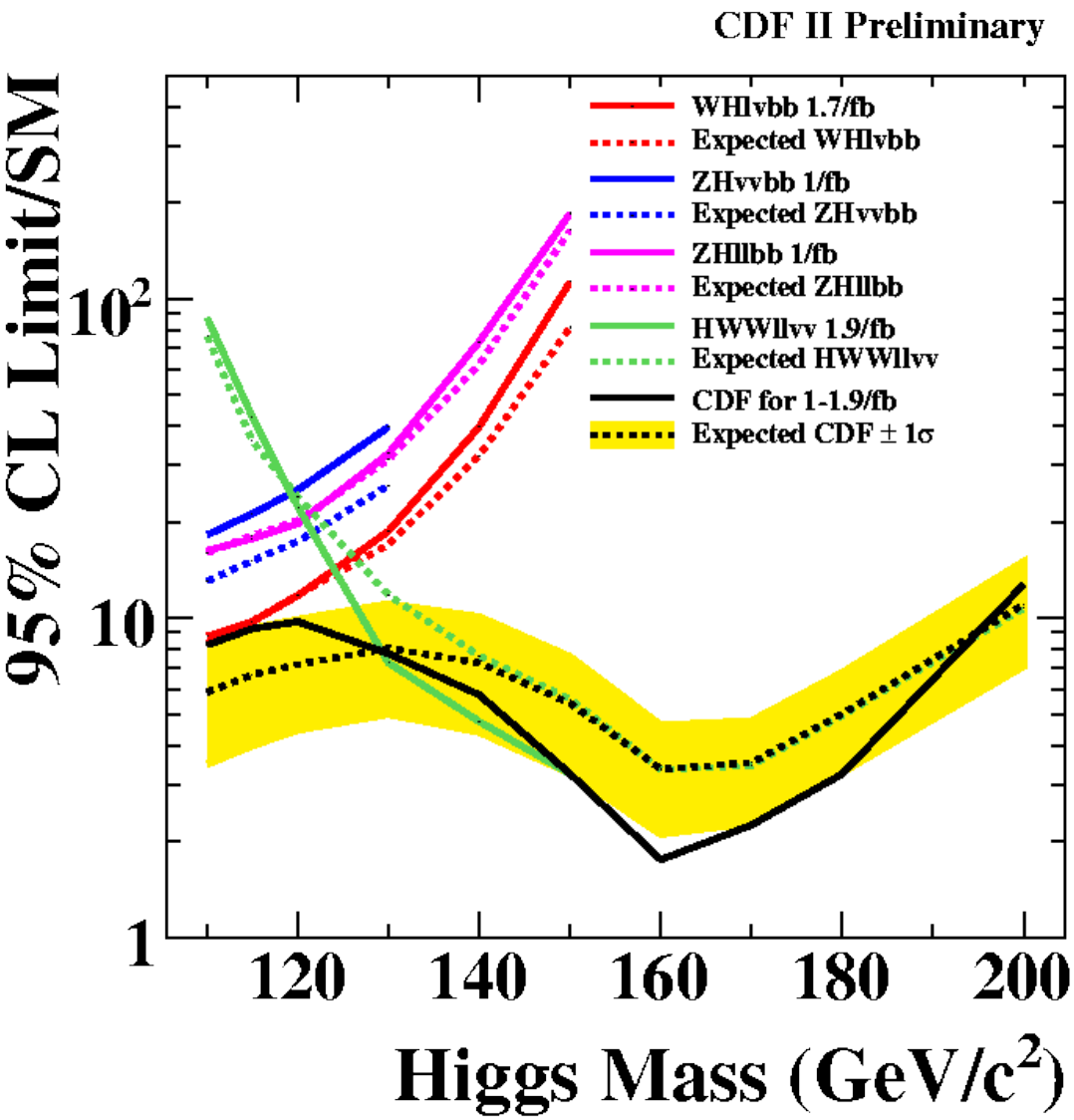

The $H \rightarrow b\bar{b}$ inclusive channel can contribute to Higgs search at CDF II in the low mass region

BCKUP

Trigger HighPtBjet

Level 1
- Two central 5 GeV towers
- Two XFT tracks with Pt > 2 GeV/c

Level 2
- Two clusters with Et > 15 GeV and $|\eta| < 1.5$
- Two SVT tracks with $|d0| > 120\ \mu m$
- Exclusive (one to one) matching cluster-SVT in $|\delta\phi| < 0.7$
- Z cut mode 2

Level 3
- Two cone 0.4 jets with Et > 20 GeV
- Two COT tracks (matched to SVT) with $|d0| > 100\ \mu m$
- Two silicon daughters of SVT tracks with $|d0| > 80\ \mu m$

Off-line
- Two b-tagged 0.4 off-line jets

Trigger and off-line efficiencies

Dataset High Pt b jet: Total Events processed:		996 K	
Events from recent trigger table:		996 K	
Events passing Off Line requirements:		31 K	3.15% wrt 996 K

MC Z->bb

Total Events processed:	200 K		
Events from recent trigger table:	139 K		
Events passing Level1 (Trigger Bit):	76 K	54.91%	wrt 139 K
Events passing Level2 (Trigger Bit):	8 K	6.01%	“
Events passing Level3 (Manual cuts):	5 K	3.74%	“
Events passing Off Line requirements:	2 K	1.55%	“

MC h->bb

Total Events processed:	125 K		
Events from recent trigger table:	113 K		
Events passing Level1 (Trigger Bit):	92 K	81.12%	wrt 113 K
Events passing Level2 (Trigger Bit):	19 K	16.87%	“
Events passing Level3 (Manual cuts):	15 K	12.82%	“
Events passing Off Line requirements:	5 K	3.17%	“

Trigger L2Btag

$d_0 = -R_b \sin(\Delta\phi) \sim -R_b \Delta\phi$

R_b is the slope in the $d_0 - \phi$ plane

The Z->bb background

- Already observed in similar triggers
- Can be used as normalization for luminosity
- Invariant mass resonance
- Kinematic variables more similar to bb background than to H->bb signal

Selection of the H $\rightarrow$ bb inclusive channel

- Sample selection:
  Trigger and off-line requirements
- Sample composition
- Discriminant variables
- Selection with Neural Networks
- Results: statistic significance