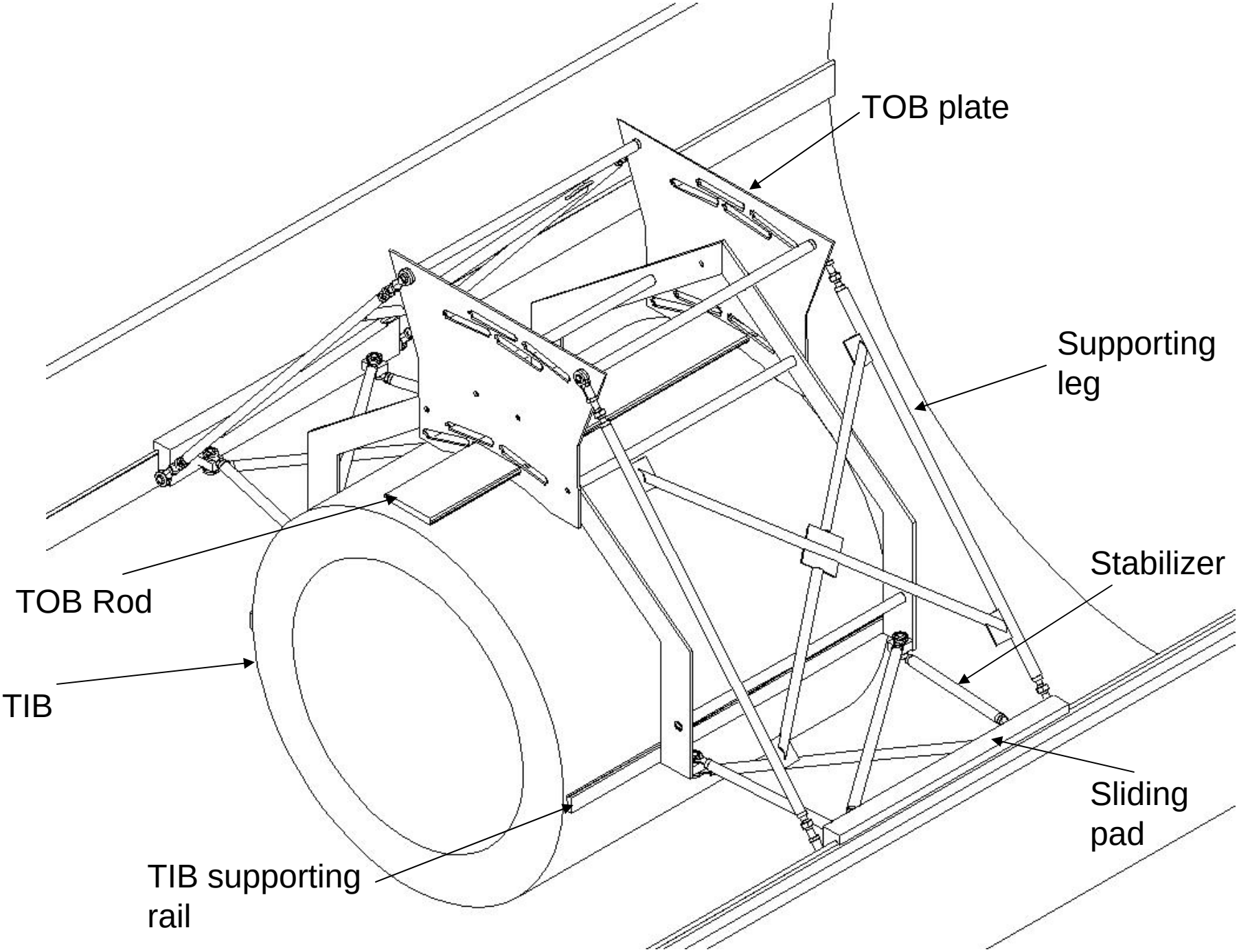
TOB plate
Supporting leg
Stabilizer
TOB Rod
TIB
Sliding pad
TIB supporting rail

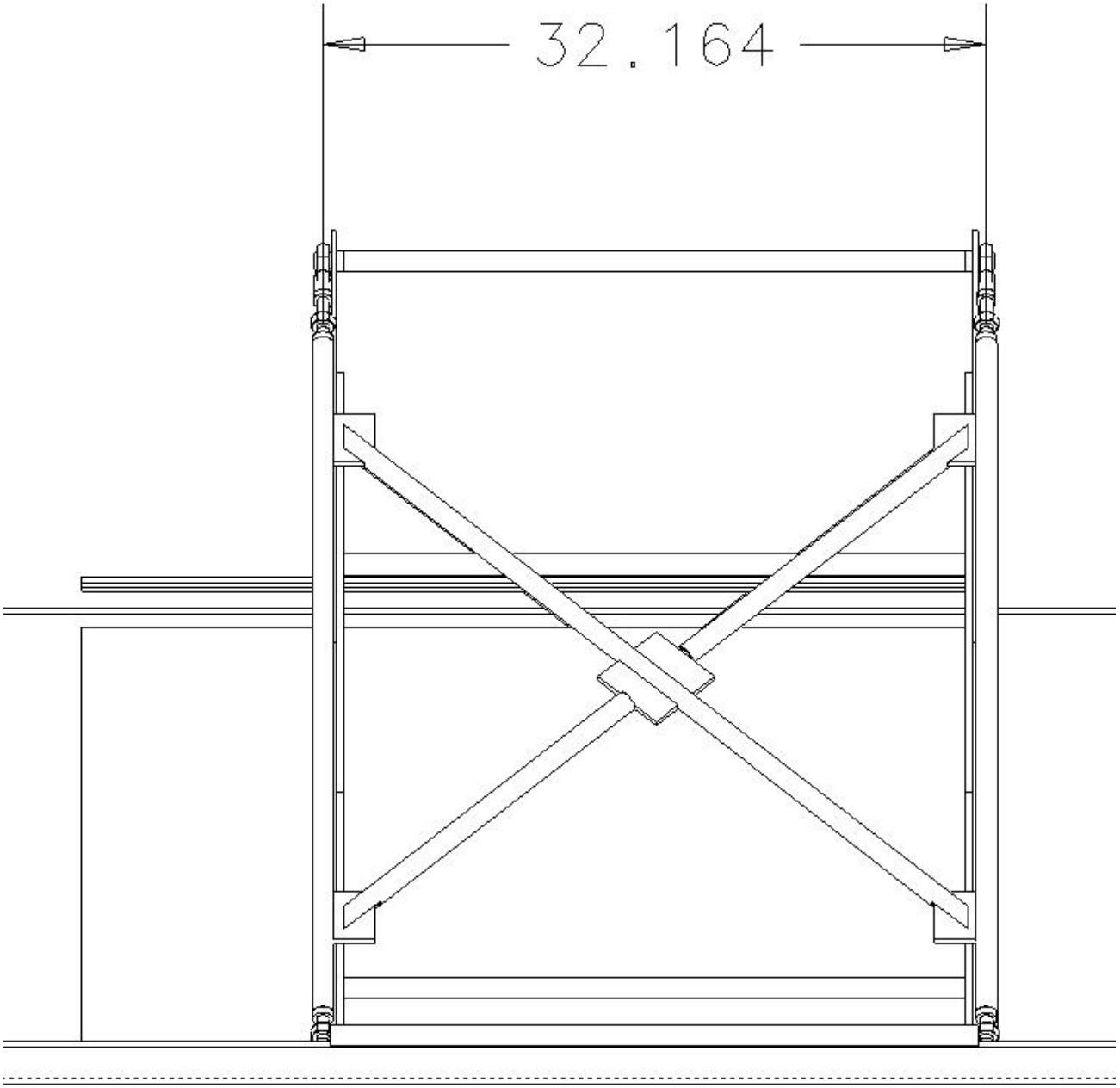
32.164

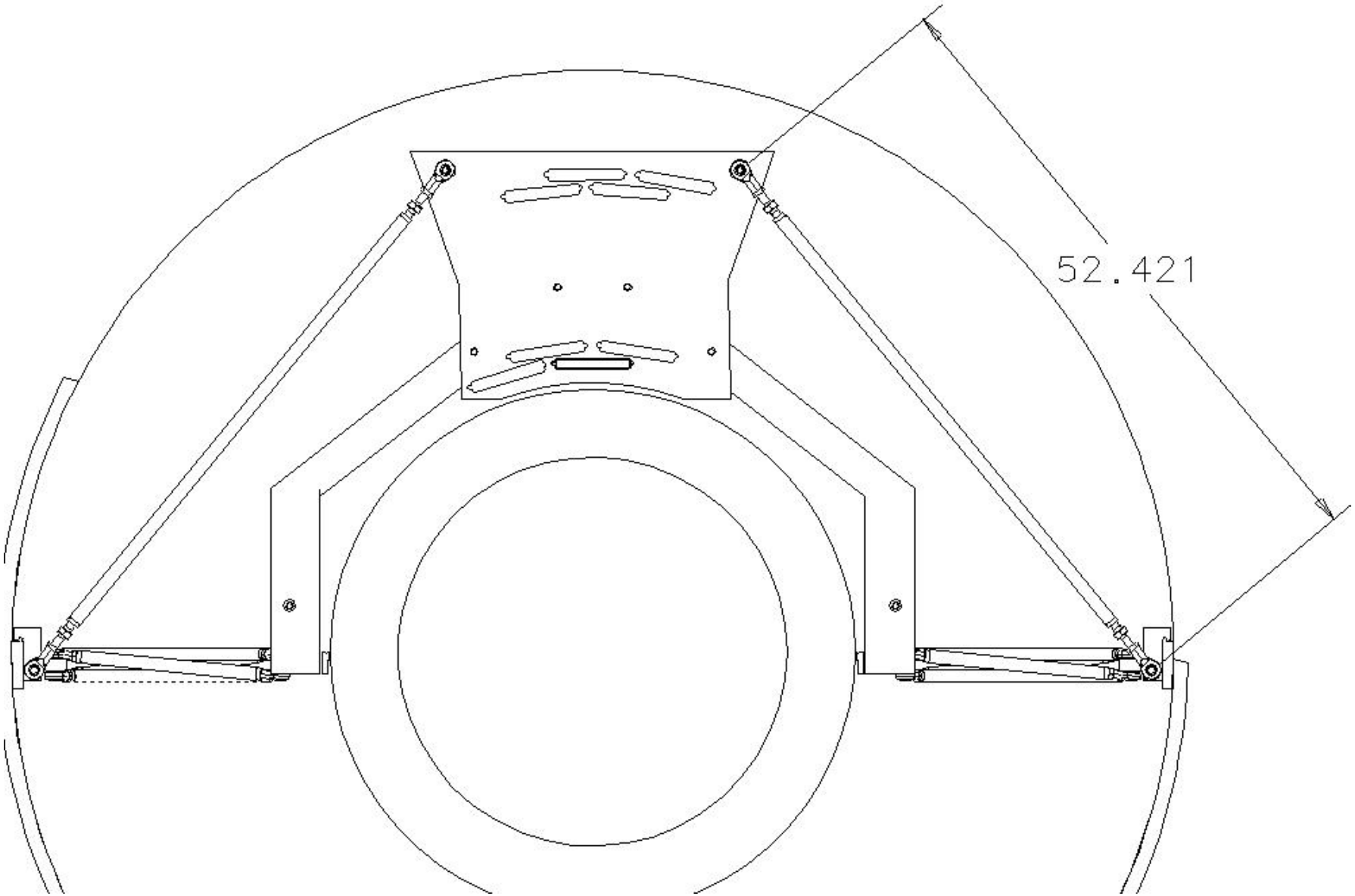
52.421