REV	DESCRIPTION	DRAWN	DATE
		APPROVED	DATE

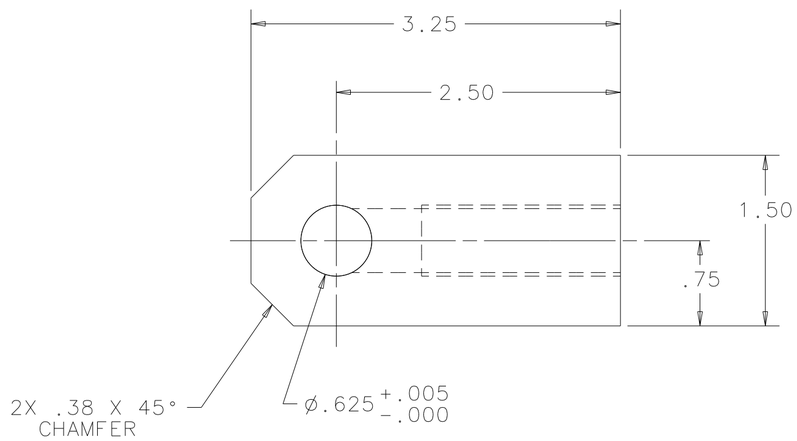

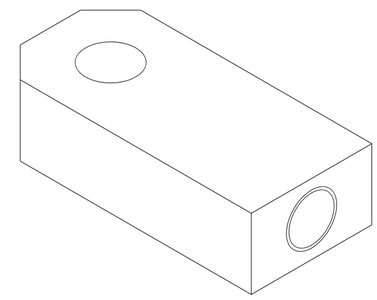

ISOMETRIC VIEW

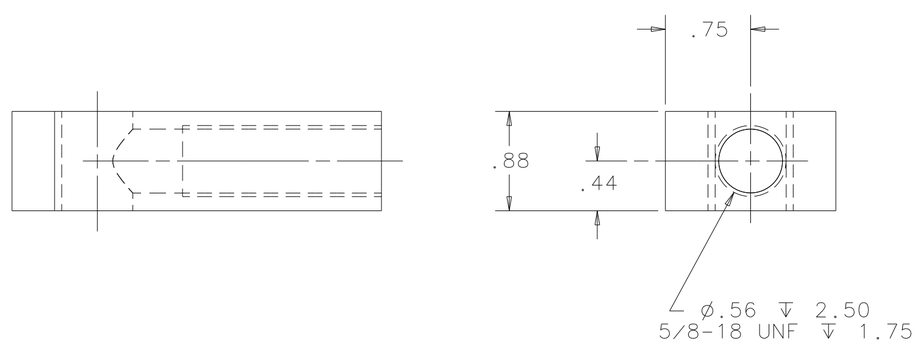

UNLESS OTHERWISE SPECIFIED			ORIGINATOR	S.MOCCIA	21-APR-2005
.XX	.XXX	ANGLES	DRAWN	J.MATESKI	26-APR-2005
± .02	± XX	± 1°	CHECKED	C.GRIMM	12-MAY-2005
			APPROVED	J.RAUCH	12-MAY-2005

1. BREAK ALL SHARP EDGES .015 MAX.
2. DO NOT SCALE DRAWING.
3. DIMENSIONS BASED UPON ASME Y14.5M-1994
4. MAX. ALL MACH. SURFACES 125
5. DRAWING UNITS: U.S. INCH

USED ON: 9213.600-MD-435270

MATERIAL: 6061-T6 ALUMINUM

FERMI NATIONAL ACCELERATOR LABORATORY
UNITED STATES DEPARTMENT OF ENERGY

CMS/DETECTORS/STRIP TOB-TIB MAGNETIC TEST STAND CONNECTION BLOCK

SCALE	DRAWING NUMBER	SHEET	REV
1:1	9213.600-MC-435263	1 OF 1	

CREATED WITH : Ideas11NXSeries | GROUP: PPD/MECHANICAL DEPARTMENT

NOTICE: IMAGE OBTAINED FROM FERMILAB WEB SITE

This information is provided for REFERENCE use only. Not for MANUFACTURE, or DESIGN INFORMATION. All information contained in this document represents work sponsored by an agency of the U.S. Government. Neither the U.S. Government nor any agency thereof, nor Universities Research Association, Inc., nor any of their employees or officers, makes any warranty, express or implied, or assumes any legal liability or responsibility for the accuracy, completeness, or usefulness of any information, apparatus, product or process disclosed, or represents that its use would not infringe privately owned rights.