REV	DESCRIPTION	DRAWN	DATE
		APPROVED	DATE

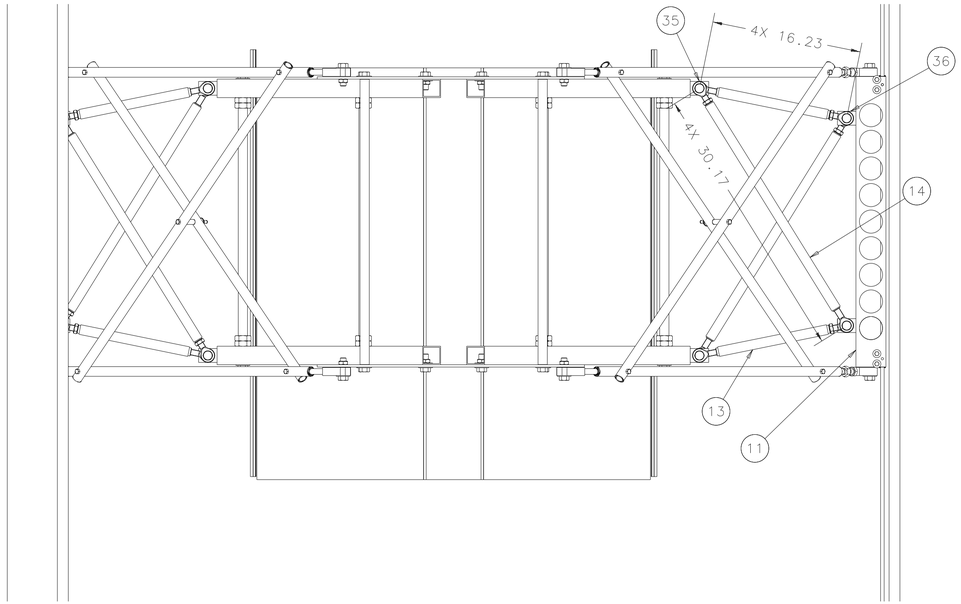

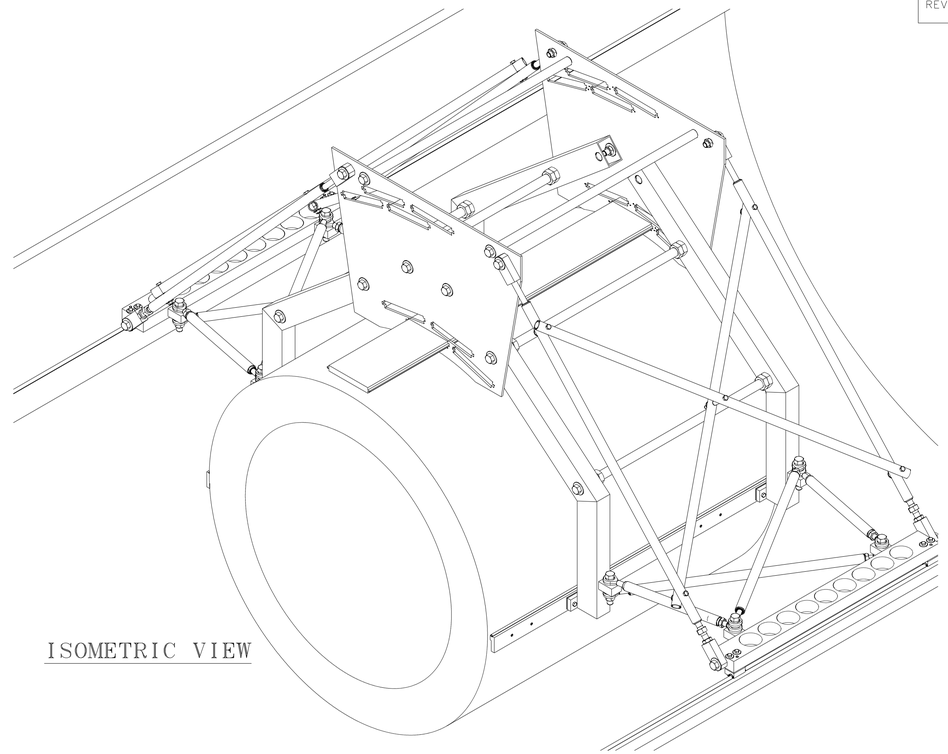

ISOMETRIC VIEW

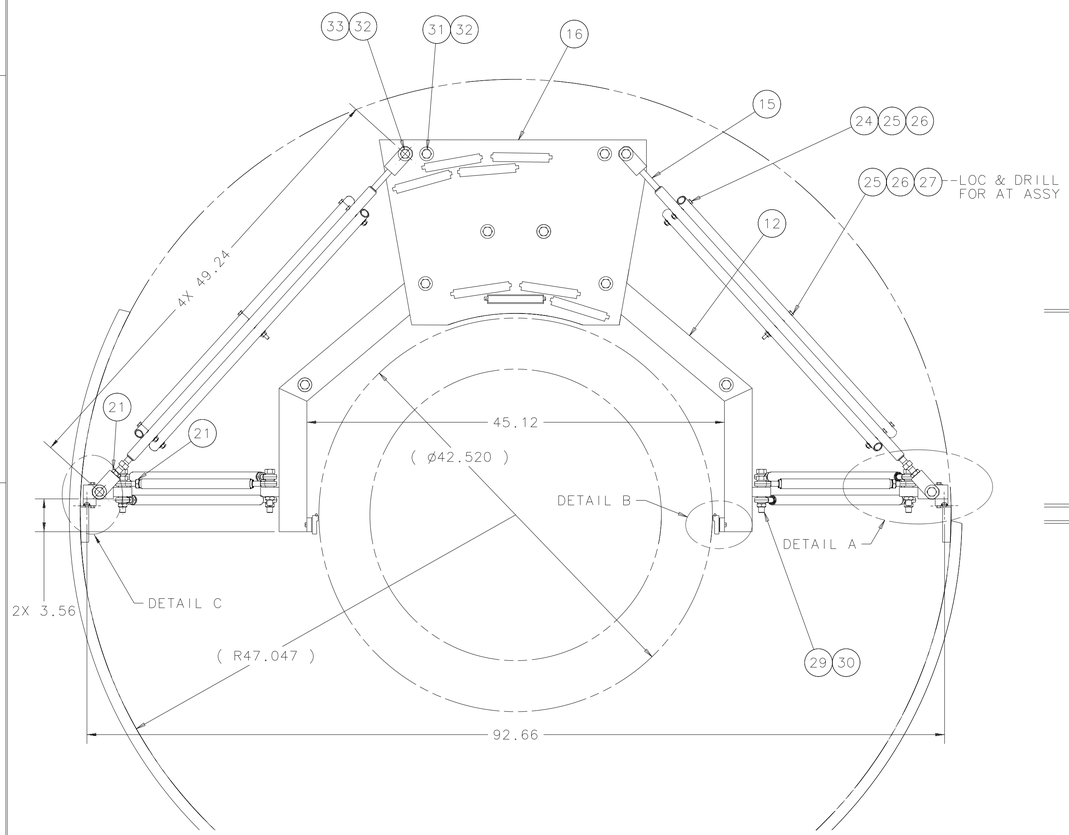

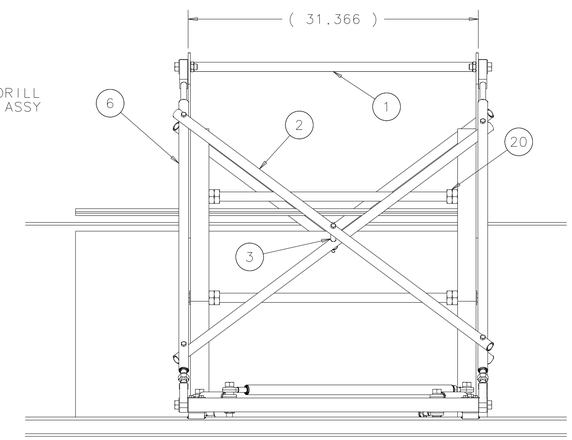

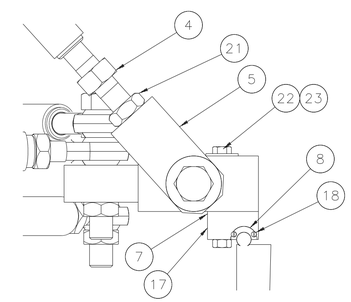

DETAIL A
(SCALE=1:2)

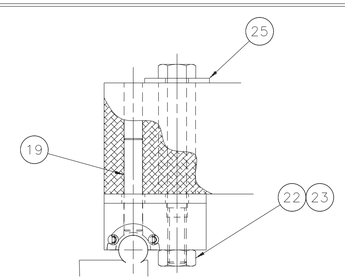

DETAIL C
(SCALE=1:1)

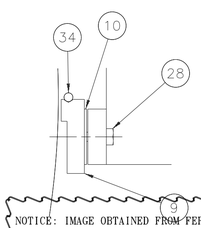

ITEM	PART NO.	DESCRIPTION OR SIZE	QTY.
36	KALI-10	IGUS ROD END LEFT HAND	8
35	KARI-10	IGUS ROD END RIGHT HAND	8
34	AS SUPPLIED	TIB SUPPORT ROD	2
33	#92941A802	HEX HD CAP SCR 5/8-11 UNC X 2 LG BRASS, MCMASTER-CARR	8
32	#93286A021	WASHER ø.687 X 1.50 X .078 THK ALUMINUM, MCMASTER-CARR	32
31	#92941A798	HEX HD CAP SCR 5/8-11 UNC X 1.50 LONG BRASS, MCMASTER-CARR	16
30	#92174A455	HEX NUT JAM 5/8-11 UNC BRASS MCMASTER-CARR	8
29	#92941A808	HEX HD CAP SCR 5/8-11 UNC X 3.50 LONG BRASS, MCMASTER-CARR	8
28	#92941A542	HEX HD CAP SCR 1/4-20 UNC X 1 LG MCMASTER-CARR	8
27	#92941A598	HEX HD CAP SCR 5/16-18 UNC X 4 LONG BRASS, MCMASTER-CARR	2
26	#92676A030	HEX NUT 5/16-18 UNC BRASS MCMASTER-CARR	10
25	#93286A015	WASHER PLAIN 5/16 ALUMINUM MCMASTER-CARR	18
24	#92941A593	HEX HD CAP SCR 5/16-18 UNC X 2-1/2 LONG BRASS, MCMASTER-CARR	8
23	#92676A029	HEX NUT 1/4-20 UNC BRASS MCMASTER-CARR	8
22	#92941A552	HHCS 1/4-20 UNC X 2.50 BRASS MCMASTER-CARR	8
21	#92174A460	HEX JAM NUT 5/8-18 UNF BRASS MCMASTER-CARR	28
20	#92174A038	HEX JAM NUT 1-8 UNC BRASS MCMASTER-CARR	16
19	#97325A185	DOWEL PIN 1/4 X 1.00 BRASS MCMASTER-CARR	2
18	#92453A077	ROUND HD SCR 2-56 UNC X 1/4 LONG BRASS, MCMASTER-CARR	16
17	MB-435305	SLIDE BEARING BODY	4
16	MD-435274	TOB END PLATE TAP	1
15	MB-435265	THREADED STUD	4
14	MD-435272	ROD 31 LG WELDMENT	4
13	MD-435276	ROD 18 LG WELDMENT	4
12	MC-435300	TOB TIB CONNECTION-WELDMENT	4
11	MD-435304	SLIDE BLOCK WELDMENT	2
10	MB-435298	TIB SPACER	4
9	MD-435297	TIB RAIL	2
8	MB-435306	SLIDE BEARING TOB	4
7	MC-435296	SLIDE TEFLON 1/8	4
6	MD-435266	ROD LONG WELDMENT	4
5	MC-435263	CONNECTION BLOCK	8
4	MB-435264	5/8 ADJUSTMENT ROD	4
3	MB-435271	SPACER	2
2	MD-435262	ALUM PIPE 48 LG	4
1	MD-435252	CONNECTION ROD 30.866 LG	6

PARTS LIST

UNLESS OTHERWISE SPECIFIED			ORIGINATOR	S.MOCCIA	21-APR-2005
.XX	.XXX	ANGLES	DRAWN	J.MATESKI	29-APR-2005
± XX	± XX	± XX	CHECKED	C.GRIMM	17-JUN-2005
			APPROVED	J.RAUCH	17-JUN-2005

1. BREAK ALL SHARP EDGES .015 MAX.
2. DO NOT SCALE DRAWING.
3. DIMENSIONS BASED UPON ASME Y14.5M-1994
4. MAX. ALL MACH. SURFACES 125
5. DRAWING UNITS: U.S. INCH

USED ON

MATERIAL: SEE PARTS LIST ABOVE

FERMI NATIONAL ACCELERATOR LABORATORY
UNITED STATES DEPARTMENT OF ENERGY

CMS/DETECTORS/STRIP TOB-TIB MAGNETIC TEST STAND ASSEMBLY

SCALE	DRAWING NUMBER	SHEET	REV
1:8 AS NOTED	9213.600-MD-435270	1 OF 1	

CREATED WITH : Ideas11NXSeries | GROUP: PPD/MECHANICAL DEPARTMENT

NOTICE: IMAGE OBTAINED FROM FERMILAB WEB SITE

This information is provided for REFERENCE use only. Not for MANUFACTURE or DESIGN INFORMATION. All information contained in this document represents work sponsored by an agency of the U.S. Government. Neither the U.S. Government nor any agency thereof, nor Universities Research Association, Inc., nor any of their employees or officers, makes any warranty, express or implied, or assumes any legal liability or responsibility for the accuracy, completeness, or usefulness of any information, apparatus, product or process disclosed, or represents that its use would not infringe privately owned rights.