Silicon Vertex Trigger

Taichi Kubo

What do we want SVT to do?

- pull out the interesting B events produced at the Tevatron, hidden in much QCD background
  - Interesting B physics, also interesting charm physics, and even some exotic searches and high-Pt physics
  - Want to do this as early as possible in the trigger system
  - Need close to offline quality resolution

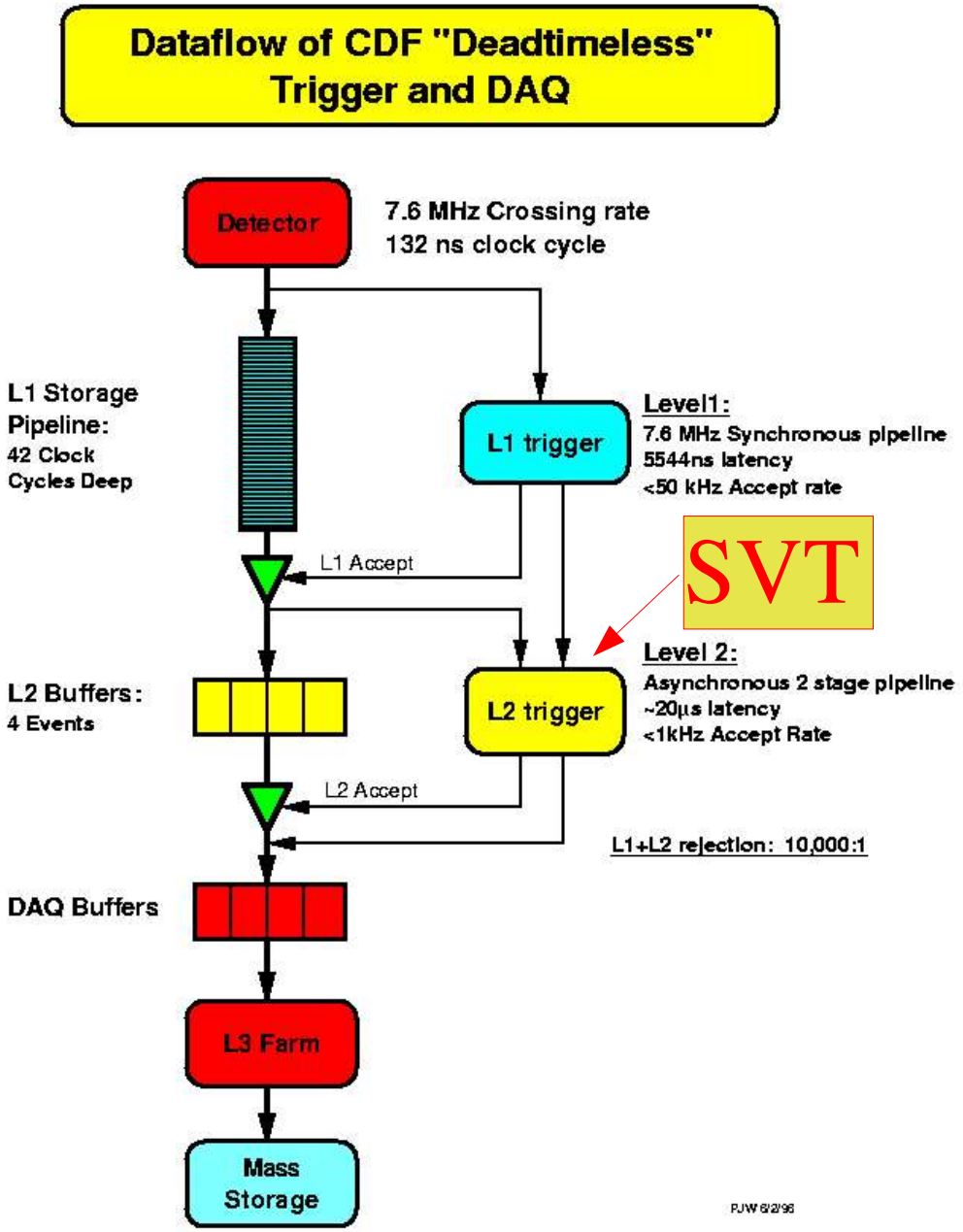
Dataflow of CDF "Deadtimeless" Trigger and DAQ
Detector
7.6 MHz Crossing rate
132 ns clock cycle
L1 Storage Pipeline:
42 Clock Cycles Deep
L1 trigger
Level1:
7.6 MHz Synchronous pipeline
5544ns latency
<50 kHz Accept rate
L1 Accept
SVT
L2 Buffers:
4 Events
L2 trigger
Level 2:
Asynchronous 2 stage pipeline
~20µs latency
<1kHz Accept Rate
L2 Accept
L1+L2 rejection: 10,000:1
DAQ Buffers
L3 Farm
Mass Storage
PJW 6/2/98

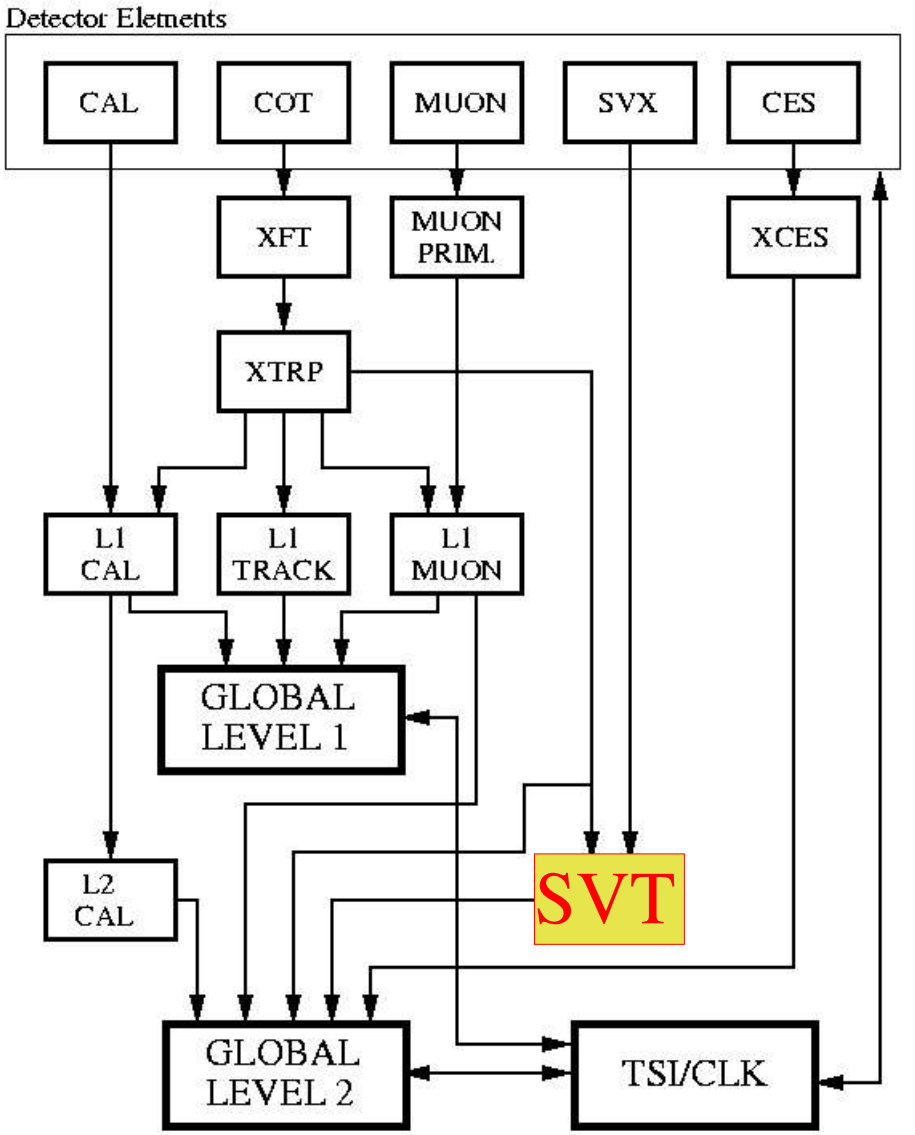
RUN II TRIGGER SYSTEM
Detector Elements
CAL
COT
MUON
SVX
CES
XFT
MUON PRIM
XCES
XTRP
L1 CAL
L1 TRACK
L1 MUON
GLOBAL LEVEL 1
L2 CAL
SVT
GLOBAL LEVEL 2
TSI/CLK

Overview

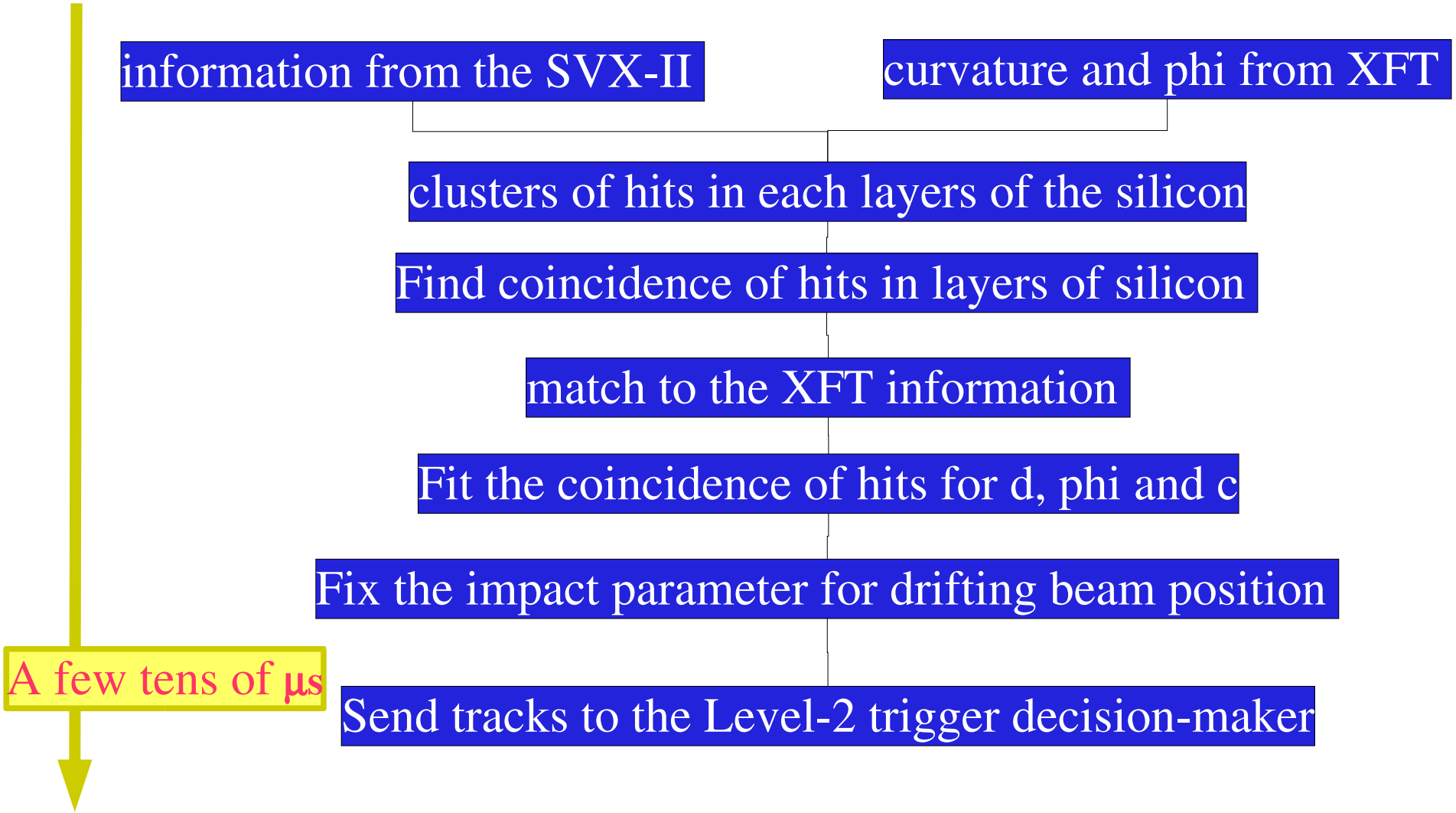
information from the SVX-II
curvature and phi from XFT
clusters of hits in each layers of the silicon
Find coincidence of hits in layers of silicon
match to the XFT information
Fit the coincidence of hits for d, phi and c
Fix the impact parameter for drifting beam position
Send tracks to the Level-2 trigger decision-maker
A few tens of μs

Overview

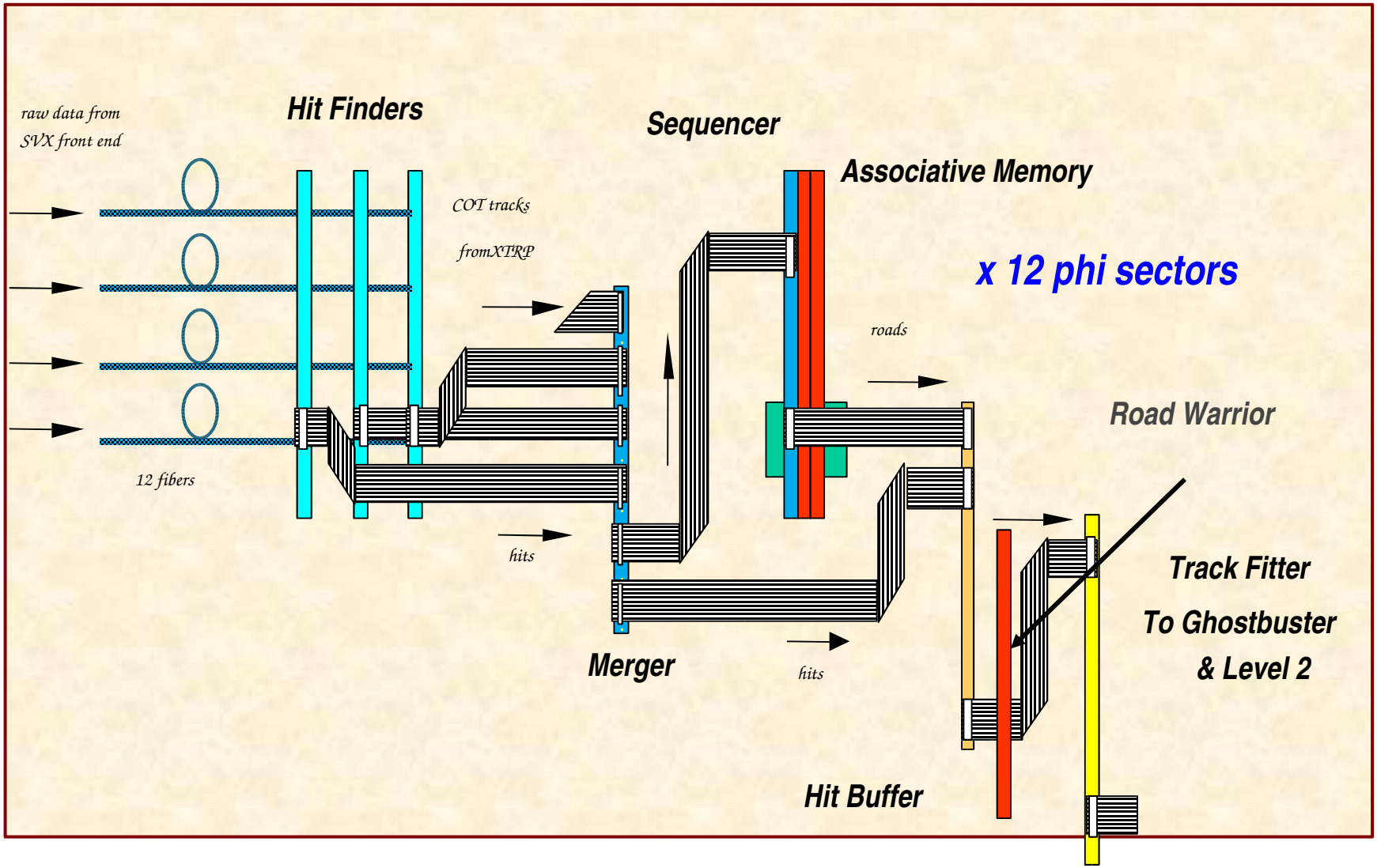
raw data from
SVX front end
Hit Finders
Sequencer
Associative Memory
COT tracks
fromXTRP
x 12 phi sectors
roads
Road Warrior
12 fibers
hits
Track Fitter
To Ghostbuster
& Level 2
Merger
hits
Hit Buffer

How do we reconstruct track?

Three of SVT's key technics

(1) Do everything you can in parallel

(2) Do pattern recognition at the same time

(3) Linear fits

Simplifying SVT

Simplify geometry, information flow as much as possible. Parallelize everything. Use common data word structure, cabling, interfaces, etc.

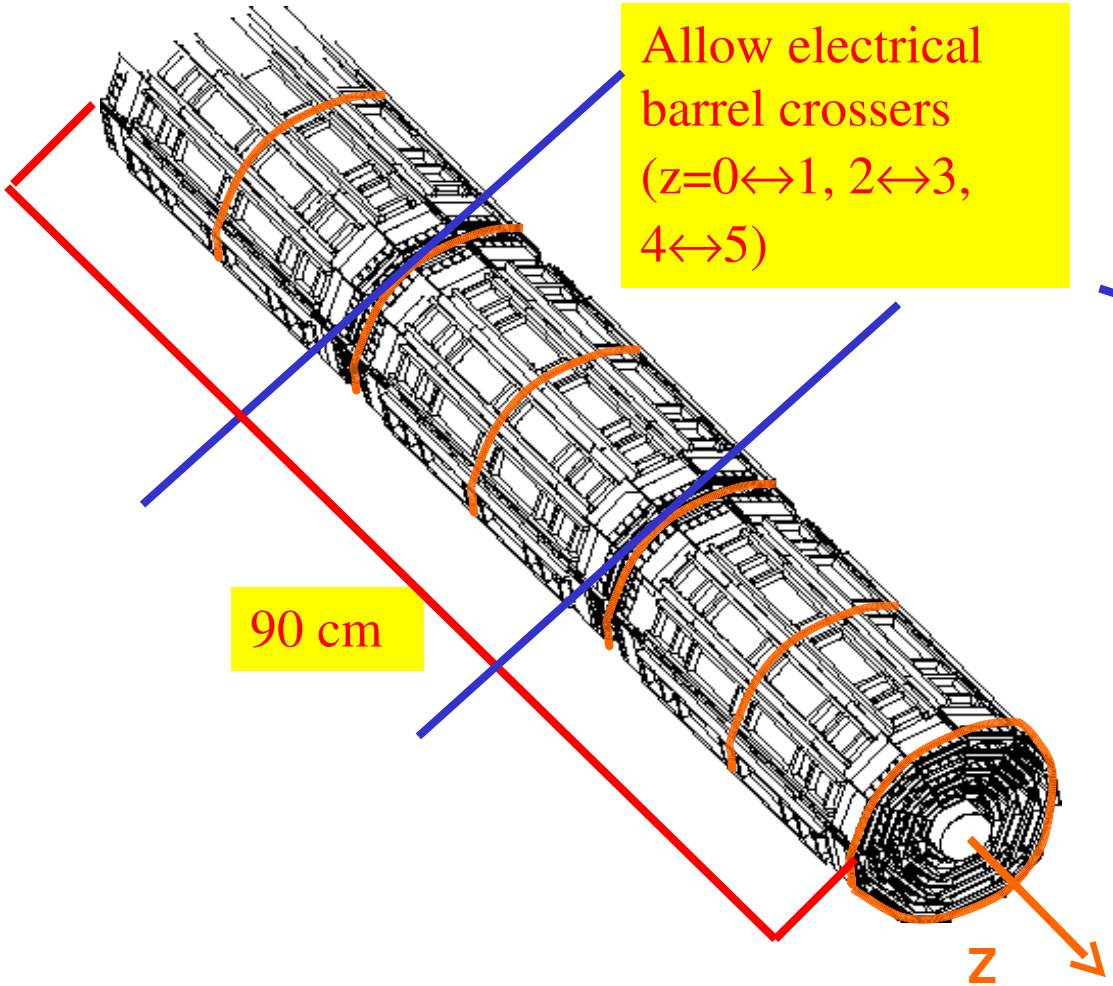

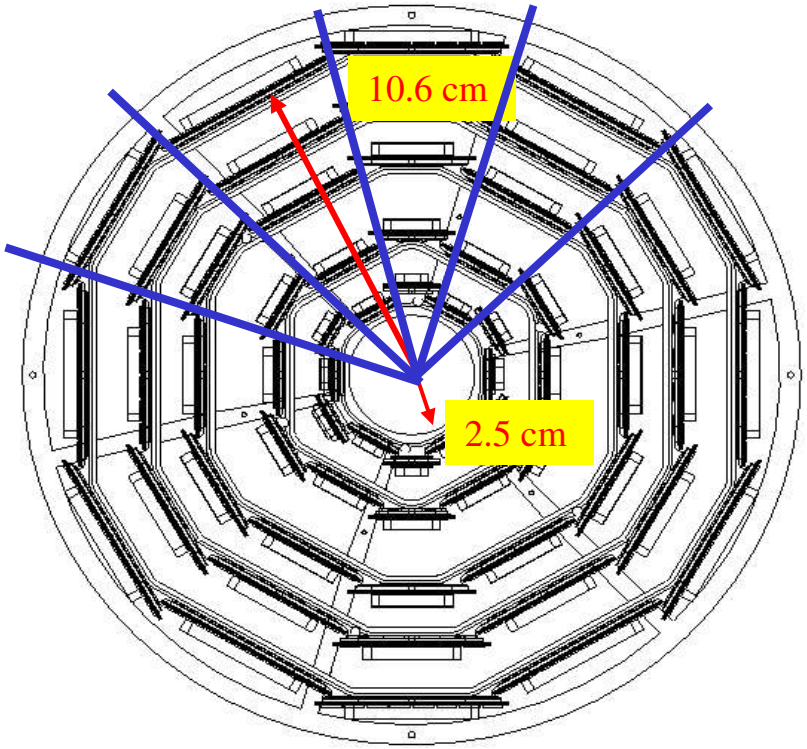

Do NOT allow wedge barrel crossers

Pattern recognition

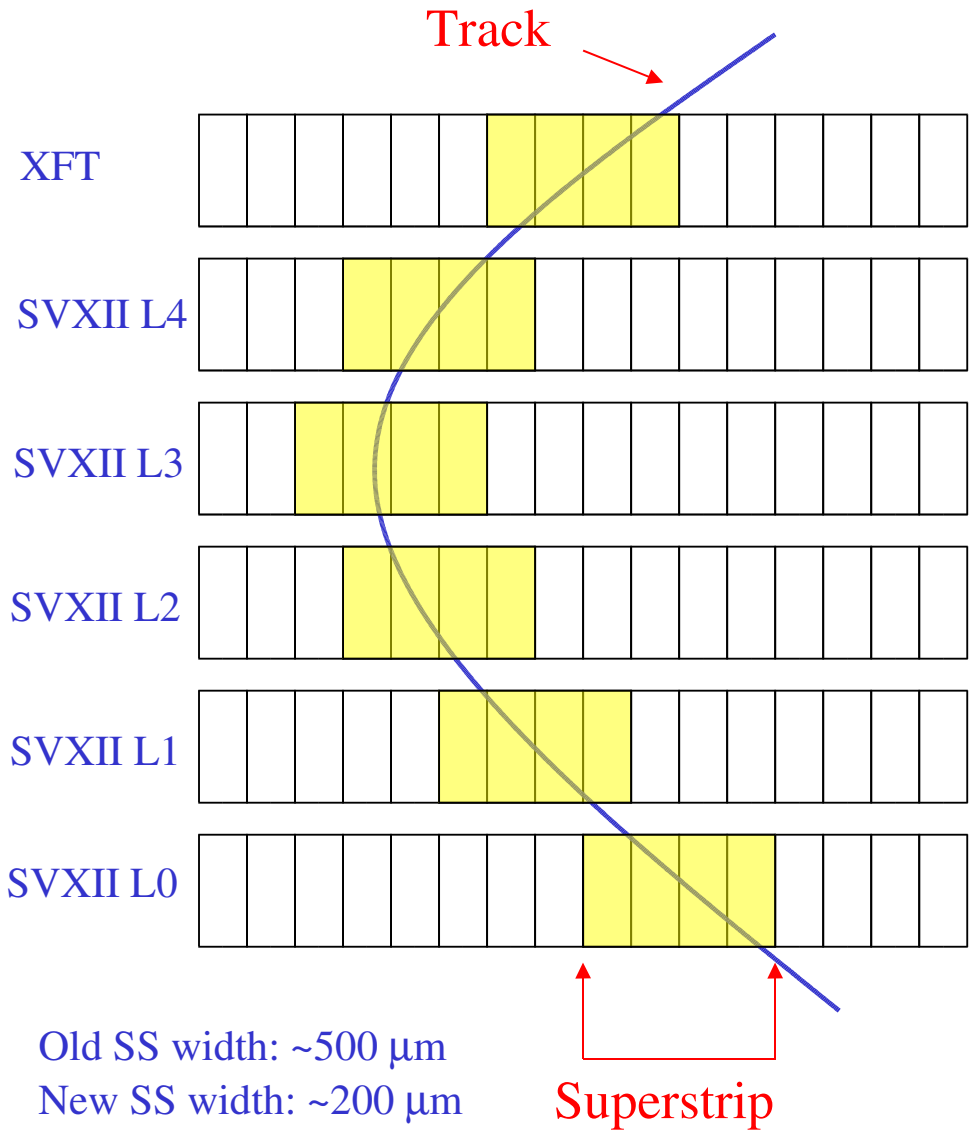

Bingo concept

- Patterns precompiled offline
  - Old SVT: 32k roads/wedge
  - New SVT: 512k roads/wedge
- Broadcast hits to all patterns at the same time.
- A pattern is fired as a road when hits in at least 4/5 of the silicon layers and XFT layers are found inside its superstrips.
- duplicate road is removed.

Track Fitting

- Speed up fitting for 2d track parameters with two tricks
  - Linear fits, only: $\vec{c} = A\vec{x} + \vec{b}$
    - Valid in a small enough region
  - Confine a track to the road it fired
- Have 6 inputs for track fitting: 4 silicon hit positions, ϕ_{XFT} and c_{XFT}
- Fit for 3 track parameters (d, ϕ and c), have 3 remaining constraints for goodness-of-fit ($\chi^2 = \chi_1^2 + \chi_2^2 + \chi_3^2$)
- Speed up fit by referring to road boundary. Let's say we're in the jth road:

$$\vec{c}_{0j} + \boldsymbol{\delta}\vec{c} = A(\vec{x}_{0j} + \boldsymbol{\delta}\vec{x}) + \vec{b}_j$$

$$\vec{c} = A\boldsymbol{\delta}\vec{x} + \vec{d}_j$$

with

$$\vec{d}_j = A\vec{x}_{0j} + \vec{b}_j$$

$$A\boldsymbol{\delta}\vec{x}$$

Faster to multiply than

$$A\vec{x}$$

$\vec{d}_j$ and A

precomputed and stored inside the track fitters. The A depend on layers hit and z, the d depend on road ID and which layers hit

Impact parameter correction

- Tracks from 12 Track Fitters merged together
- Sent to the Ghostbuster (GB), which combines them and sends them to L2
- But first the GB corrects the track impact parameters
    - Fit out the sinuosoidal wave in d vs ϕ
    - Beam position information sent in real-time to accelerator folks

$d = X0 \cdot \sin(\varphi) - Y0 \cdot \cos(\varphi)$

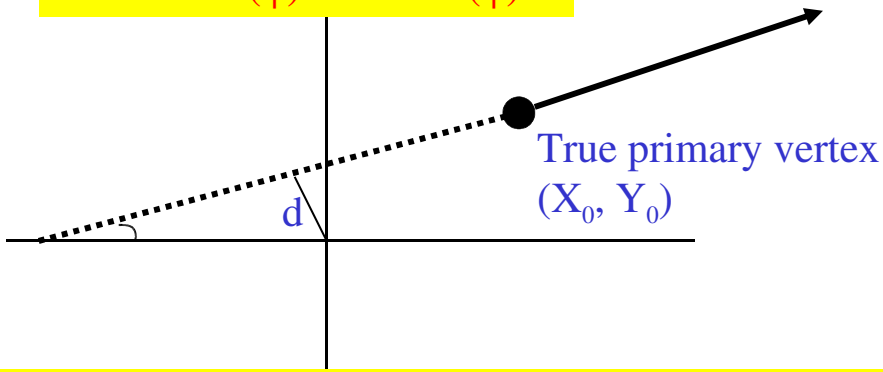

With correction, SVT functions well beam position within ~few hundred μm

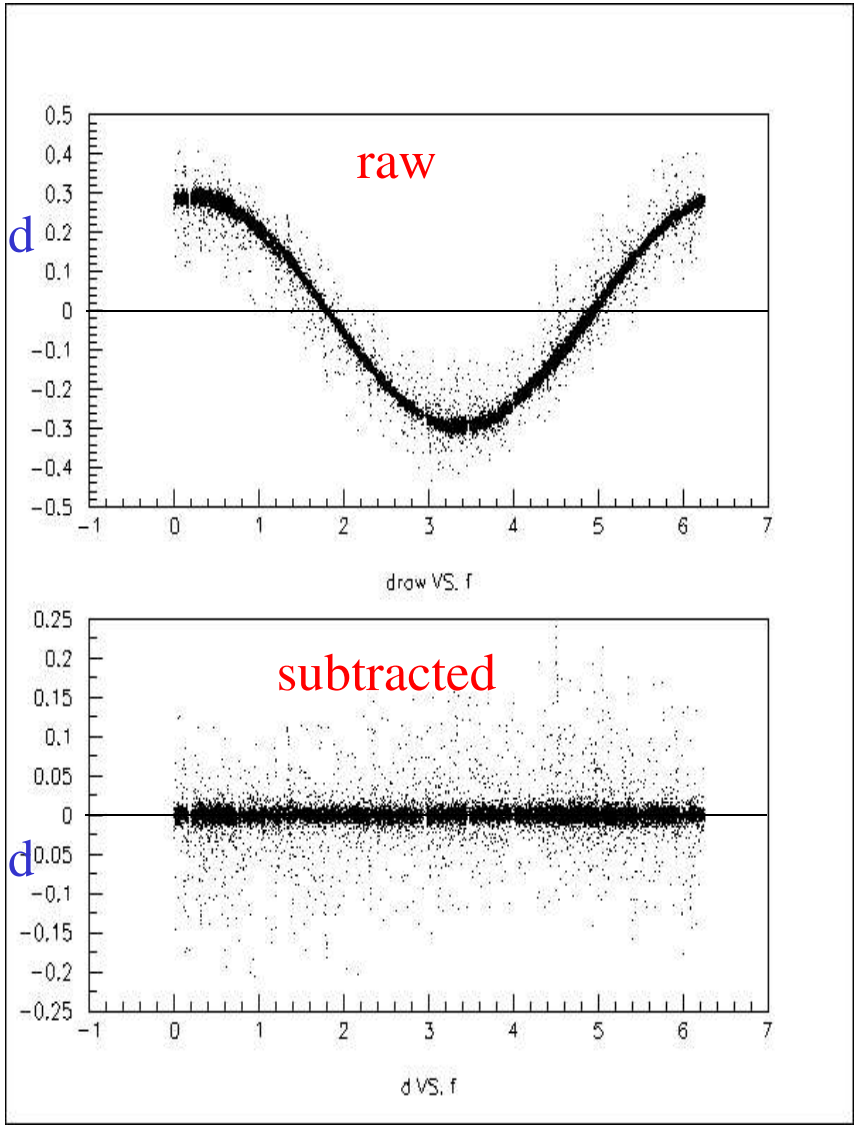

How well do we do?

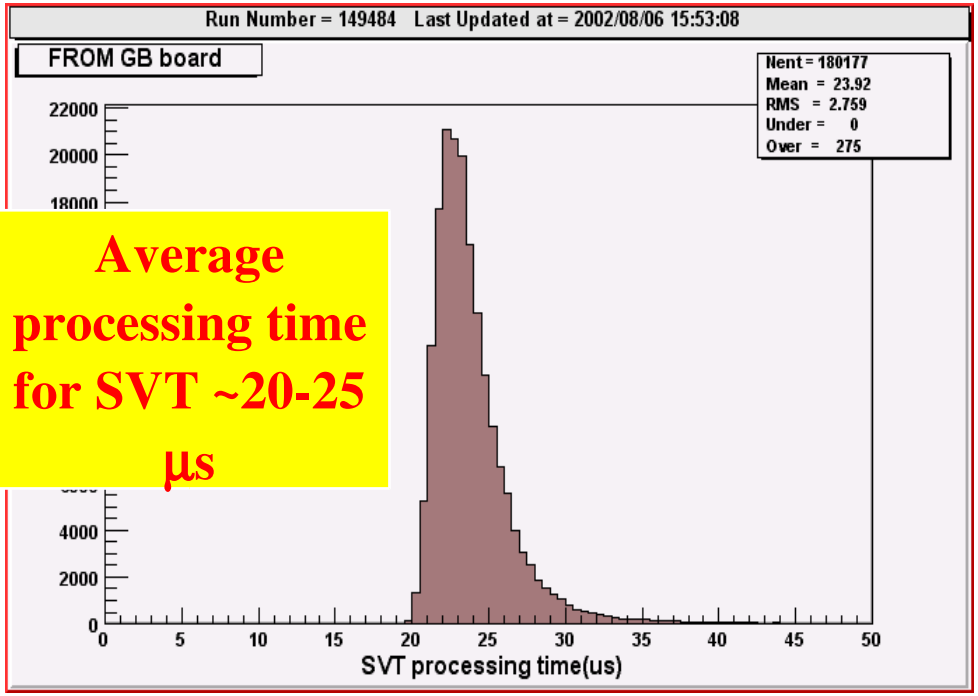

Average processing time for SVT ~20-25 μs

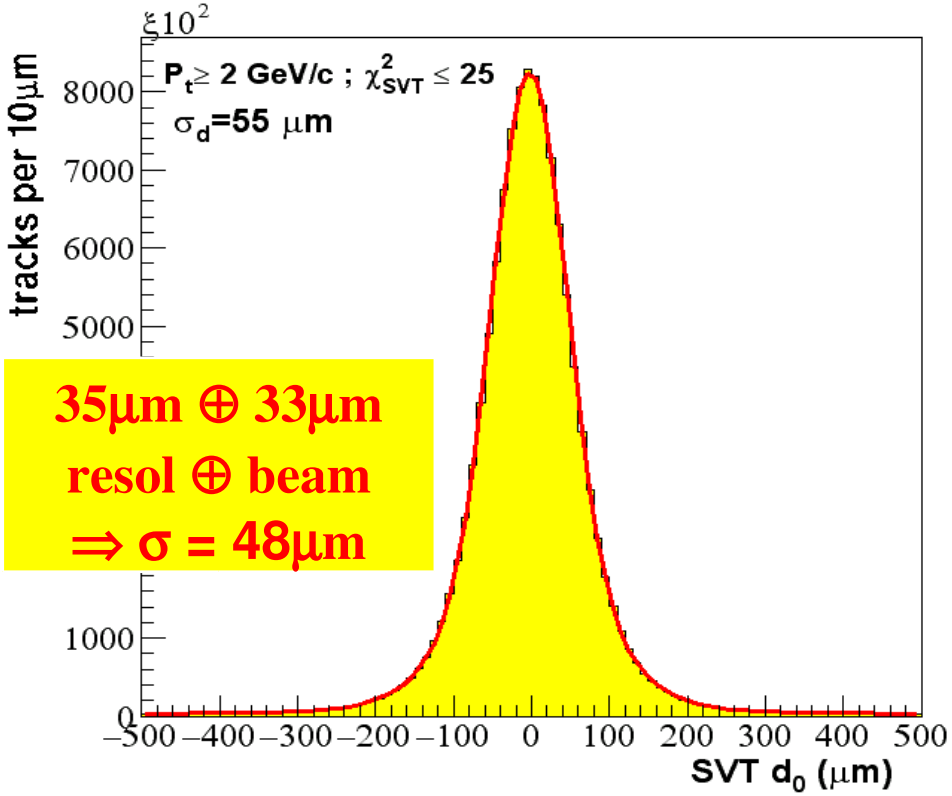

35μm ⊕ 33μm resol ⊕ beam ⇒ σ = 48μm

~90% efficient for fiducial offline tracks with hits in 4 SVX layers

The upgrade

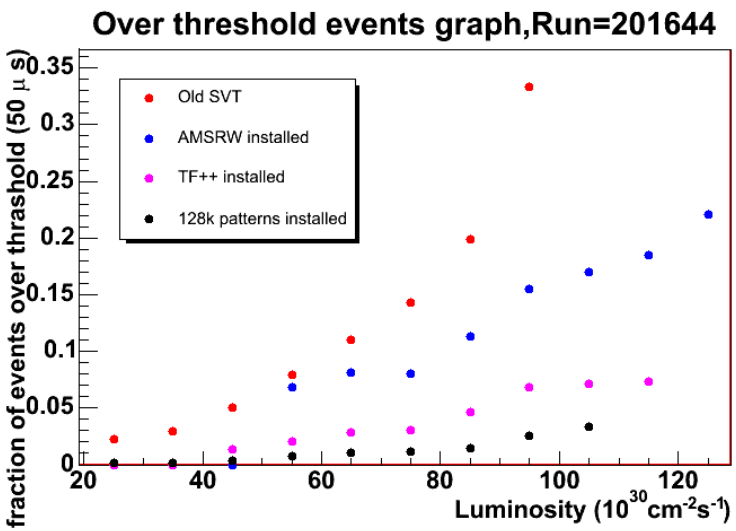

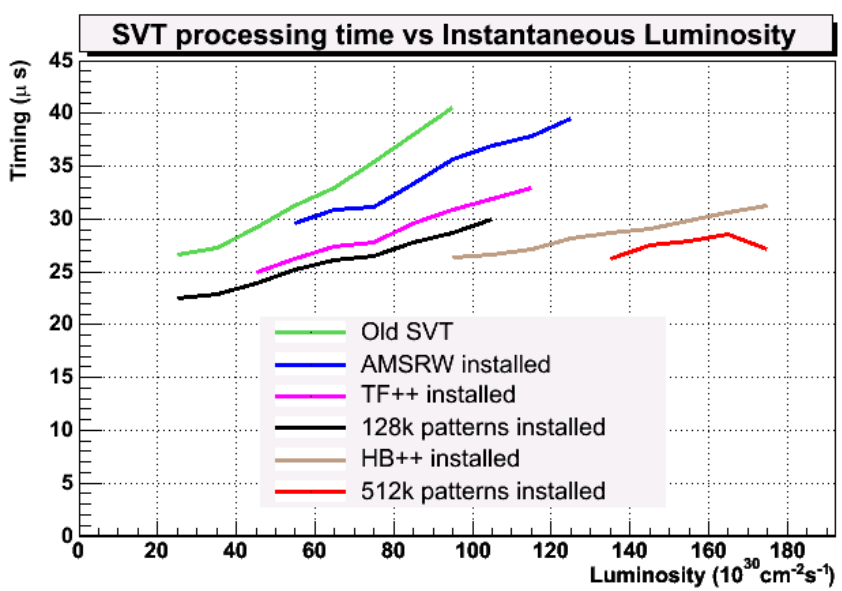

Lumi ~110E30

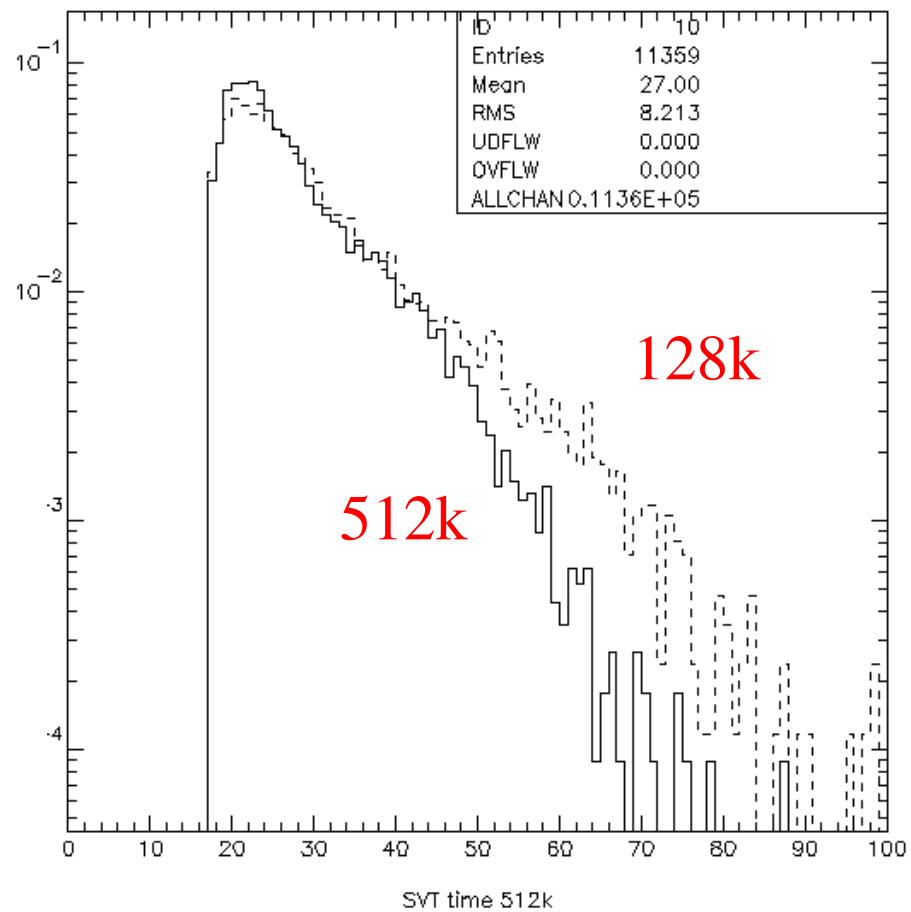

Recent work for Ghostbuster

Higher error rate of d in Wedge00

L1A interrupt the connection to one of two flash memories which stores correction factor for d and phi.

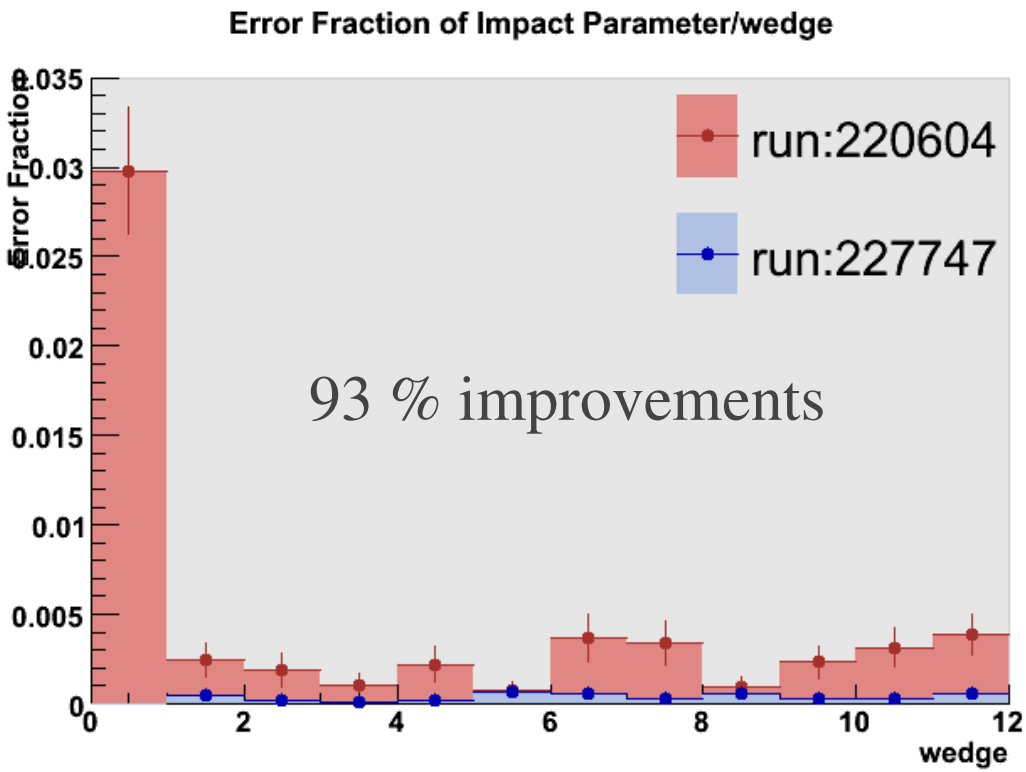

Firmware changes

- Use only a flash memory for d
- The correction factor for phi is calculated in firmware

Summary

- The Silicon Vertex Trigger is working well
- The Silicon Vertex Trigger is a key part of Run II for CDF
  - SVT reduces the background rate by a factor 1000
- SVT upgrade was a success.
  - Now running 25k at much higher luminosity

Backup

Extremely Fast Tracker (XFT)

Find tracks with p_T>1.5 GeV in 1.9 μs

$\sigma(1/p_T) = 1.7\%/\text{GeV}$

$\sigma(\phi_o) = 5$ mrad
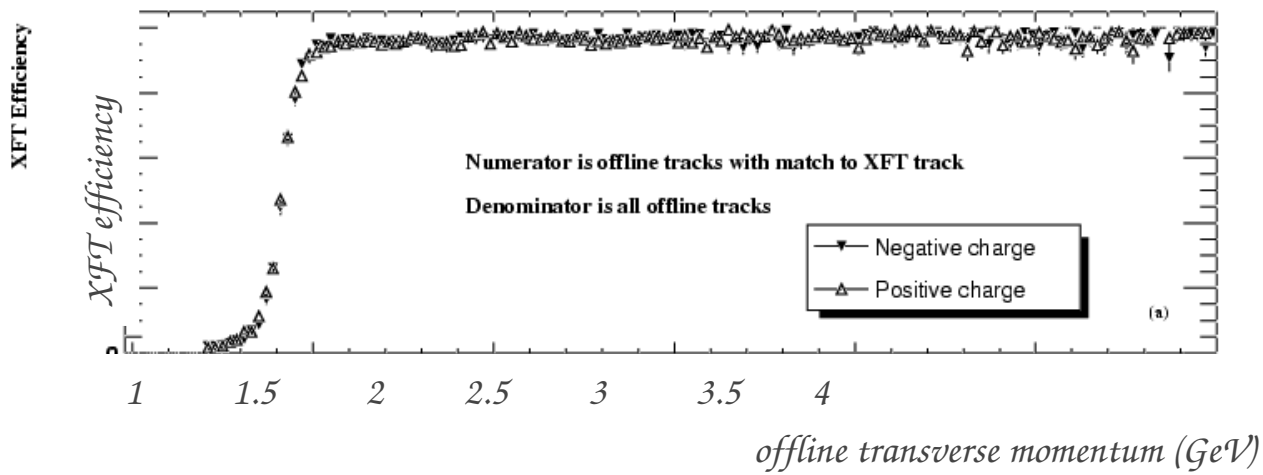
96% efficiency